Intrinsic universality and the computational power of self-assembly

Damien Woods

Caltech

Computation and geometry

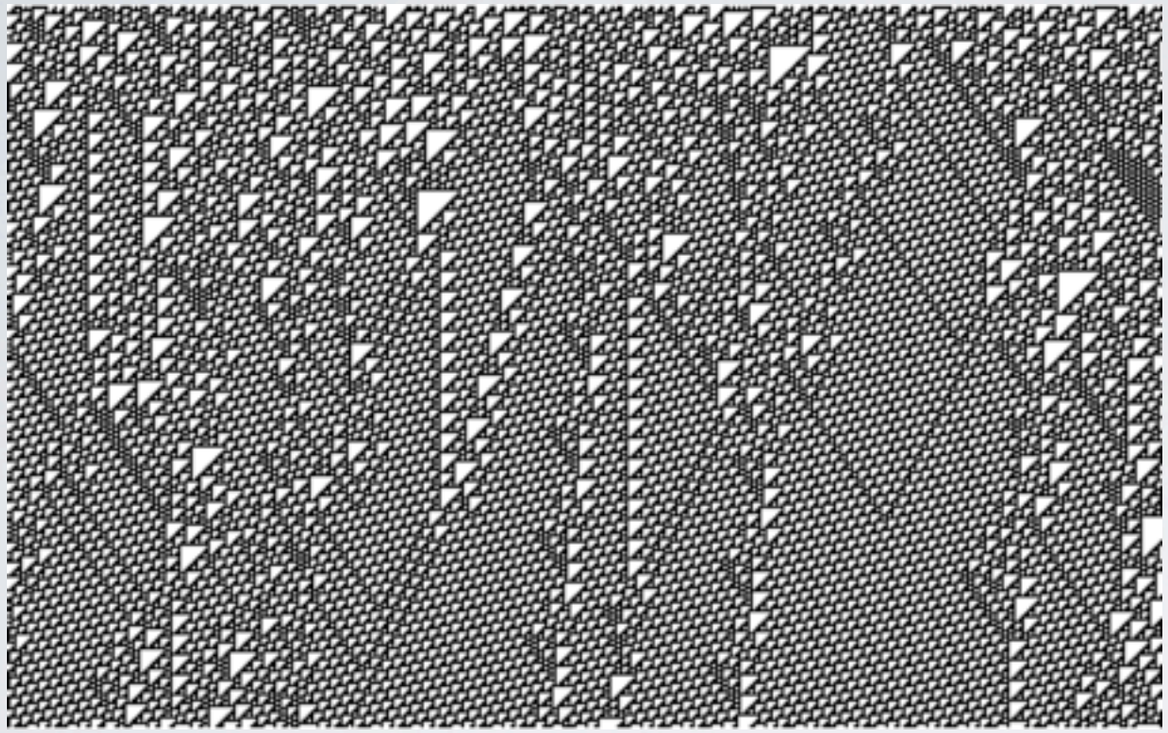

Rule 110 - from Cook. Complex Sys 2004.

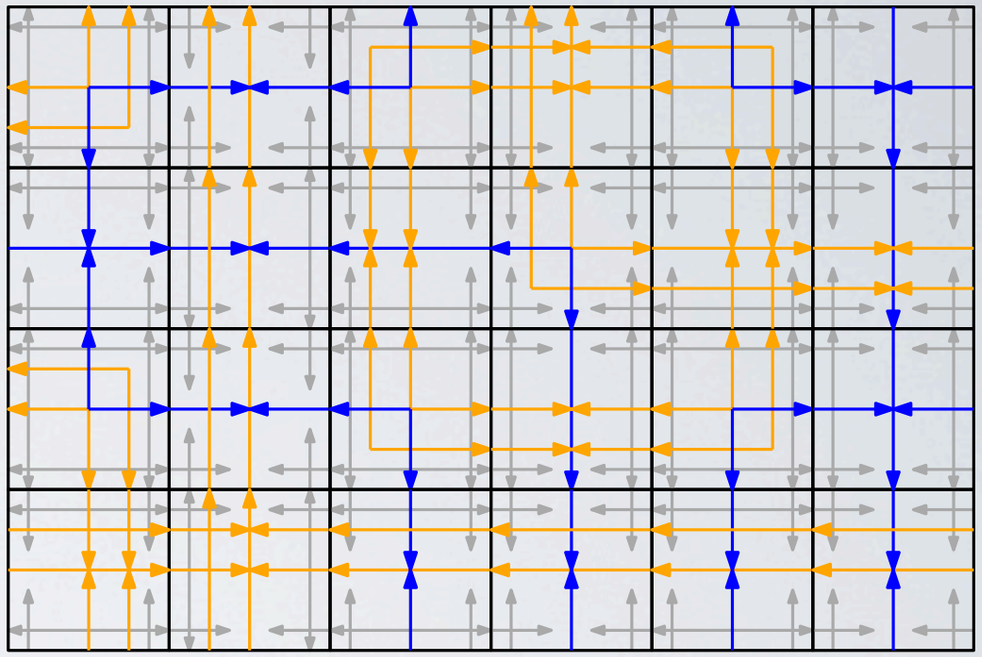

Portion of a tiling of Robinson's 10-tile aperiodic square tile set

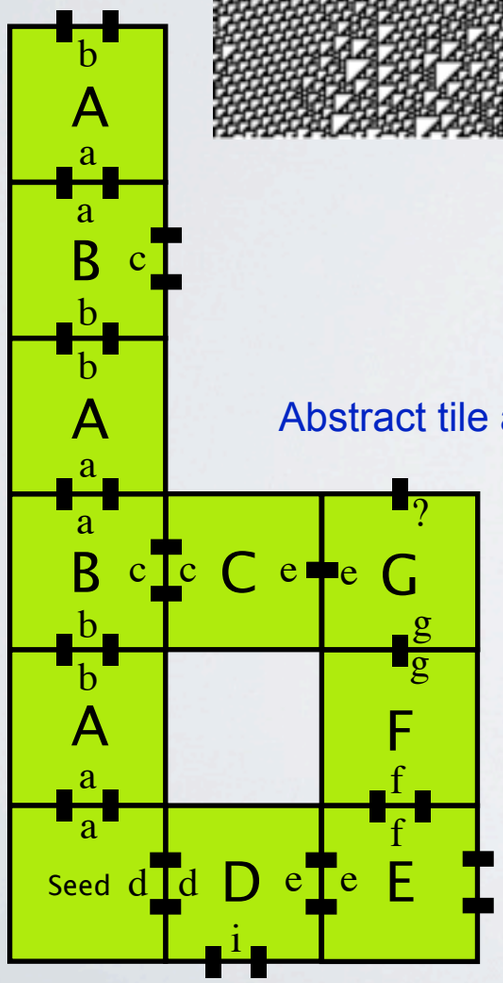

Abstract tile assembly model. Winfree 1998

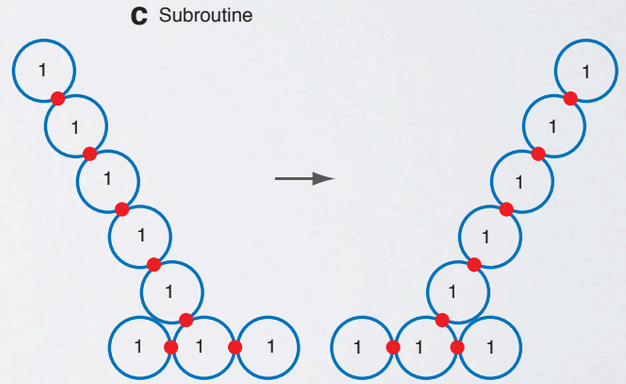

Nubots - From Woods, Chen , Goodfriend, Dabby, Winfree, Yin. ITCS 2013

Physical motivation

- Engineers are building nanoscale molecular (chemical) computers

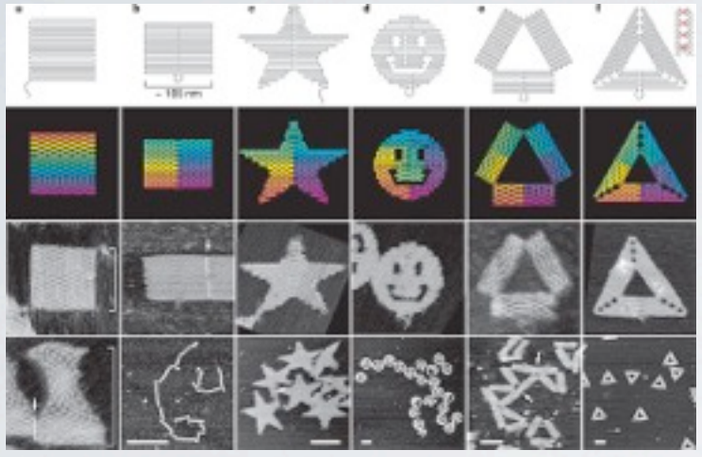

Rothemund, PWK. Folding DNA to create nanoscale shapes and patterns. Nature 2006

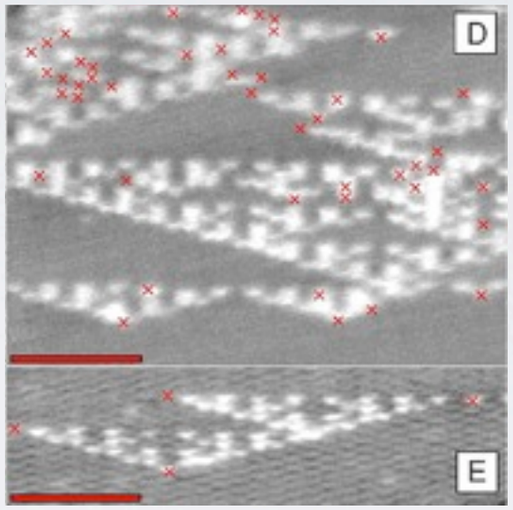

Rothemund, Papadakis, Winfree 2004

- Nature computes

"Indeed, if the physics of our universe could not support computation, it's doubtful that it could support life" Moore & Mertens. "The Nature of Computation" 2012

Sumazin et al. Cell 147(2). 2011

- We need a computational theory of self assembly and molecular interactions
- Prediction in science
- More importantly (for us), we can find interesting theoretical problems involving computation, geometry, asynchronousity, kinetics and thermodynamics

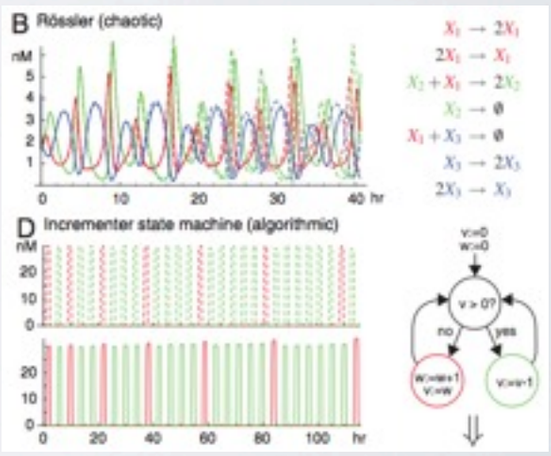

Soloveichik, Seelig, Winfree. DNA as a Universal Substrate for Chemical Kinetics. PNAS 2010

Our journey

FORODWAITH
ERED MITHRIN
IRON HILLS
The Lost Realm of
ARNOR
ERIADOR
RHUDAUR
CARDOLAN
MINHIRIATH
ENEDWAITH
RHOVANION
MIRKWOOD
Sea of Rhûn
RHÛN
The BROWN LANDS
ROHAN
GONDOR
MORDOR
ERED LITHUI
NURN
Sea of Nurnen
South Gondor
NEAR HARAD
The Realm of MIDDLE EARTH
Miles
?

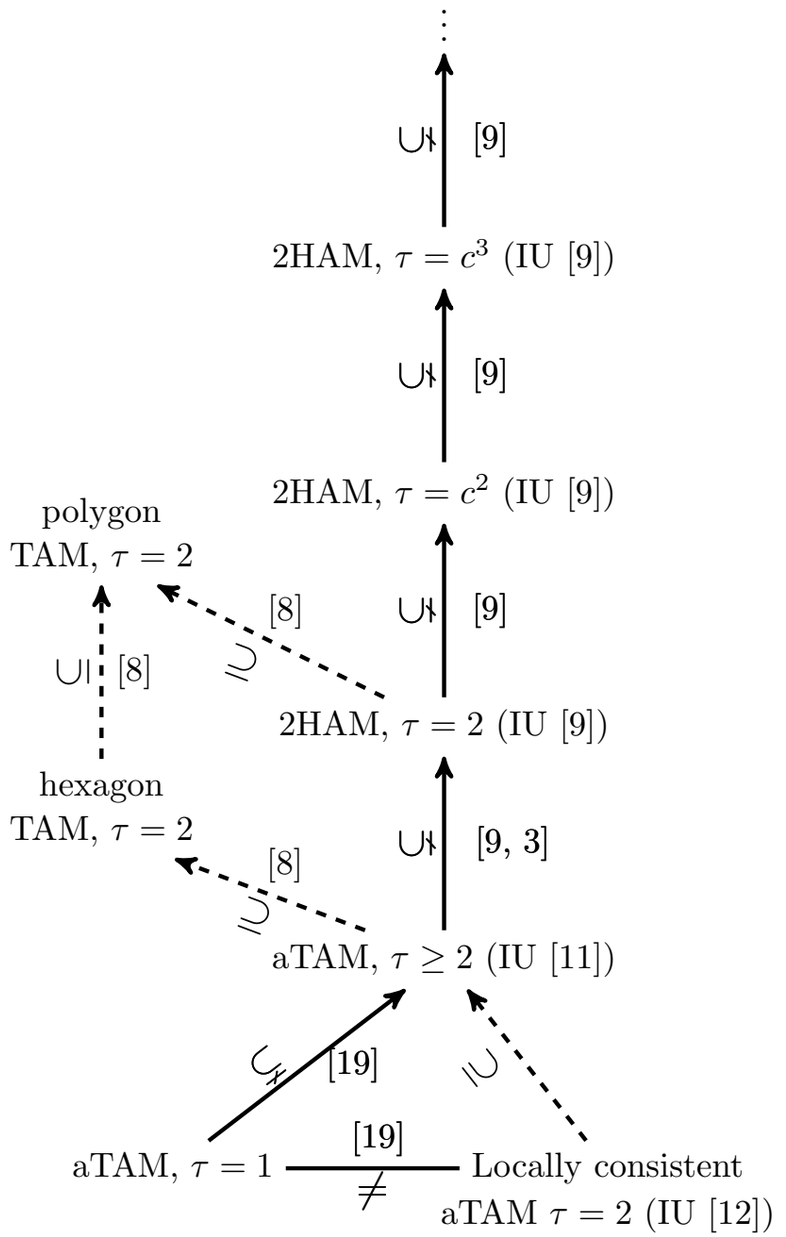
⋮
[9]
2HAM, $\tau = c^3$ (IU [9])
[9]
2HAM, $\tau = c^2$ (IU [9])
polygon
TAM, $\tau = 2$
[8]
[9]
[8]
2HAM, $\tau = 2$ (IU [9])
hexagon
TAM, $\tau = 2$
[8]
[9, 3]
aTAM, $\tau \geq 2$ (IU [11])
[19]
[19]
aTAM, $\tau = 1$
$\neq$
Locally consistent
aTAM $\tau = 2$ (IU [12])

Our journey

FORODWAITH
ERED MITHRIN
IRON HILLS
The Lost Realm of ARNOR
ERIADOR
ARTHEDAIN
RHUDAUR
CARDOLAN
MINHIRIATH
ENEDWAITH
DUNLAND
ROHAN
GONDOR
MORDOR
NURN
NEAR HARAD
RHÛN
MIRKWOOD
ERED LUIN
ERED NIMRAIS
ERED LITHUI (Ash Mountains)
The BROWN LANDS
Dagorlad (Battle Plain)
Sea of Rhûn
Sea of Nurnen
South Gondor
Carn Dûm
Here was of old the Witch-realm of Angmar
Tharbad
Bree
Rivendell
Lothlórien
Fangorn
Gulf of Lhûn
Forlindon
Himling
Harlond
Harlindon
Andrast
Tolfalas
Anfalas (Langstrand)
Pinnath Gelin
Dol Amroth
Minas Tirith
Minas Morgul
Orthanc
Barad-dûr
Isengard
Helm's Deep
Edoras
Dunharrow
Fords of Isen
Erebor The Lonely Mountain
Esgaroth the Long Lake
Celduin (River Running)
Carnen (Redwater)
Stream of Gorgoroth
Morannon
Cirith Ungol
Cair Andros
Osgiliath
Minas Ithil
Amon Hen
Amon Lhaw
Argonath
Parth Galen
Nindalf
Wold and Rohan
Old Forest
Barrow-downs
Weather Hills
Chetwood
Brandywine Bridge
Sarn Ford
Old Ford
Bridge of Stonebows
Mitheithel
Greenway
Hollin
Ettenmoors
Trollshaws
Withered Heath
Grey Mountains
Misty Mountains
Wilderland
Lone-lands
Long Marshes
Old Forest Road
Great River
Great Vales
Gwathló (Greyflood)
Lond Daer
Dwarrowdelf
Redhorn Gate
Redhorn Pass
Cirith Forn en Andrath
Ered Nimrais (White Mountains)
Angrenost (Isengard)
Angren (River)
Adorn
Entwash
Limlight
Field of Celebrant
Silverlode
Nimrodel
Celebrant
Anduin
Sirannon
Harnen
Harnen Road
Poros
Lebennin
Ethir Anduin
Pelargir
Ringlo Vale
Dorwinion
Rhovanion
Wilderland
Withered Heath
Mountains of Angmar
Icebay of Forochel
Forest River
Brandywine (River)
Blue Mountains
Mountains of Lune
Mountains of Evendim
Nîn-in-Eilph (Swanfleet)
Greenway Hall
Deadmen's Dike
Old Bridge
Bridge
Brandywine Bridge
Stonebows
Old Ford
Sarn Ford
Sarn Gebir
Tharbad
Fords of Isen
Isengard
Helm's Deep
Edoras
Dunharrow
Minas Tirith
Minas Morgul
Orthanc
Barad-dûr
Cirith Ungol
Morannon
Cair Andros
Osgiliath

Abstract tile assembly model

- Finite set of unit-sized square **tiles**
  - non-rotatable, unlimited supply of each tile type
- Each side has a **glue** (a,b,c,d,...)
- Each glue has a **strength** (0,1,2,3,...)
- **Tile assembly system:** is a [**tile set**, **seed tile**, **temperature** (0,1,2,3,...)]
- Growth begins from the **seed** tile at (0,0) in Z^2
- A tile **sticks** to an assembly if enough of its glues match so that the sum of the strengths of the matching glues is at least the **temperature**
- Asynchronous

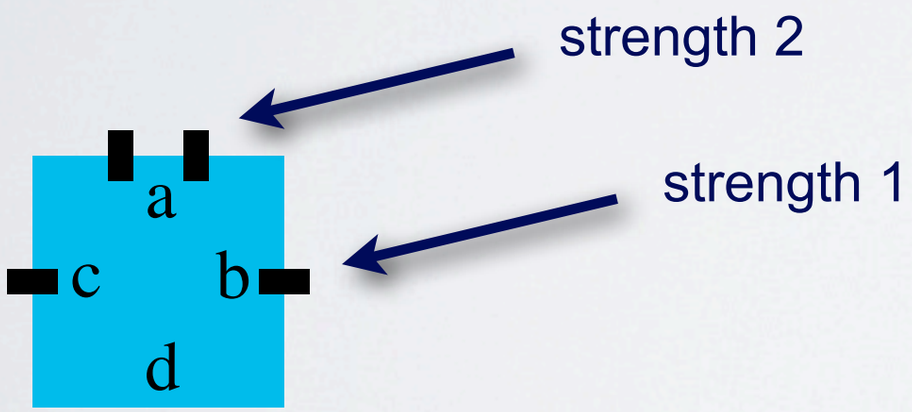

Winfree, 1998

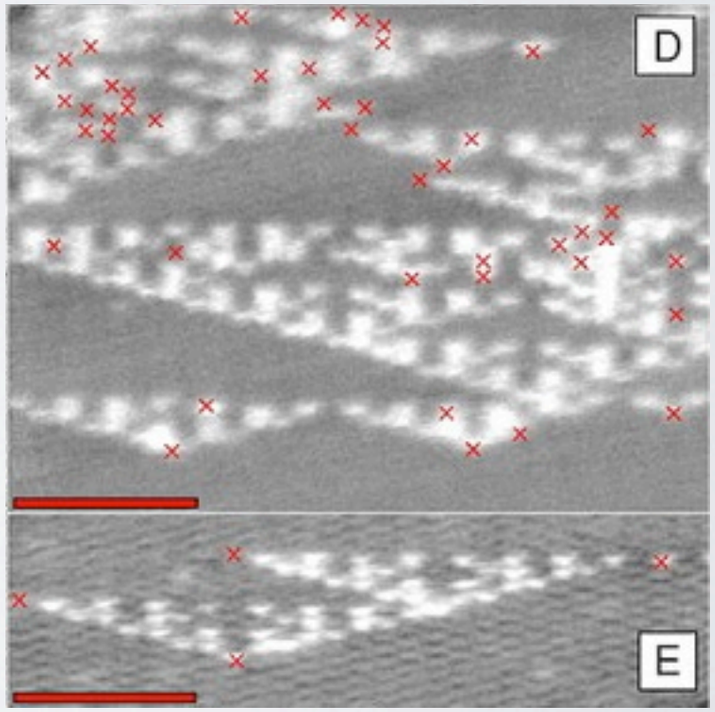

Rothemund, Papadakis, Winfree 2004

Key definition: Tile assembly system: tile set, seed tile, temperature

Abstract tile assembly model

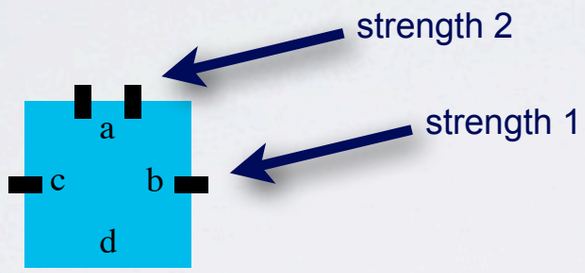

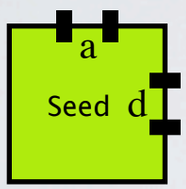

Tile assembly system:
tile set, seed tile, temperature

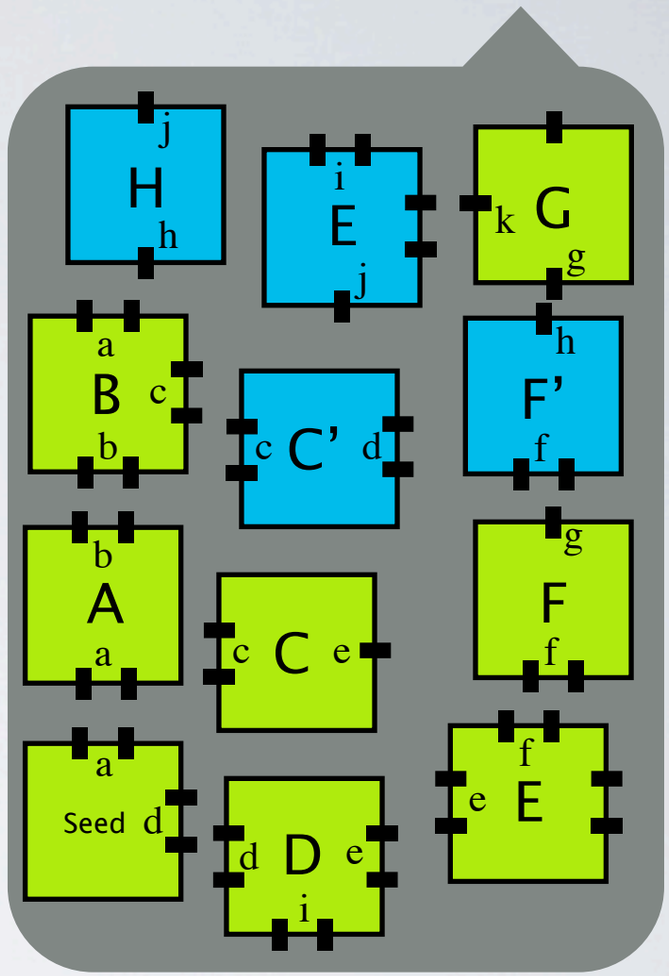

Temperature = 2

- Finite set of unit-sized square **tiles**
  - non-rotatable, unlimited supply of each tile type
- Each side has a **glue** (a,b,c,d,...)
- Each glue has a **strength** (0,1,2,3,...)
- **Tile assembly system:** is a [**tile set**, **seed tile**, **temperature** (0,1,2,3,...)]
- Growth begins from the **seed** tile at (0,0) in Z^2
- A tile **sticks** to an assembly if enough of its glues match so that the sum of the strengths of the matching glues is at least the **temperature**

Abstract tile assembly model

Tile assembly system:
tile set, seed tile, temperature

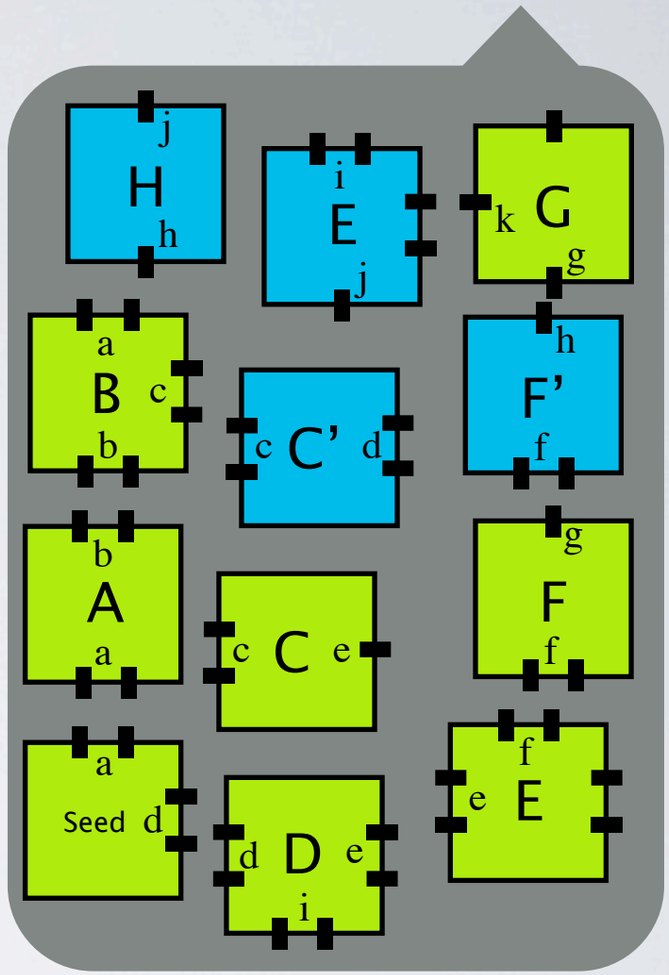

Temperature = 2

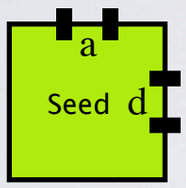

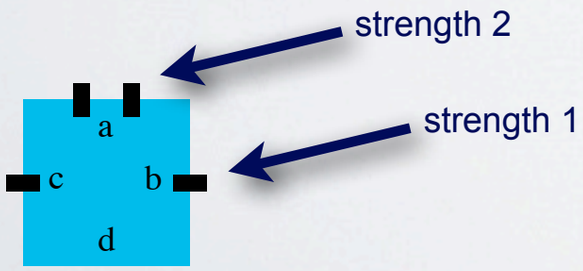

- Finite set of unit-sized square **tiles**
  - non-rotatable, unlimited supply of each tile type
- Each side has a **glue** (a,b,c,d,...)
- Each glue has a **strength** (0,1,2,3,...)
- **Tile assembly system:** is a [**tile set**, **seed tile**, **temperature** (0,1,2,3,...)]
- Growth begins from the **seed** tile at (0,0) in Z^2
- A tile **sticks** to an assembly if enough of its glues match so that the sum of the strengths of the matching glues is at least the **temperature**

Abstract tile assembly model

Tile assembly system:
tile set, seed tile, temperature

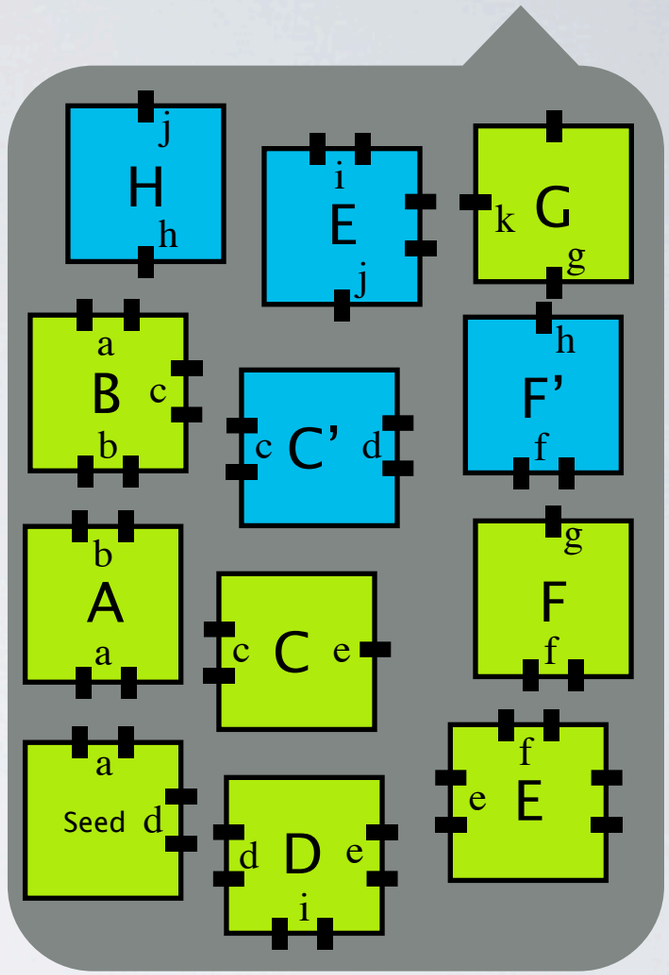

Temperature = 2

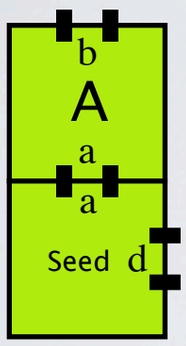

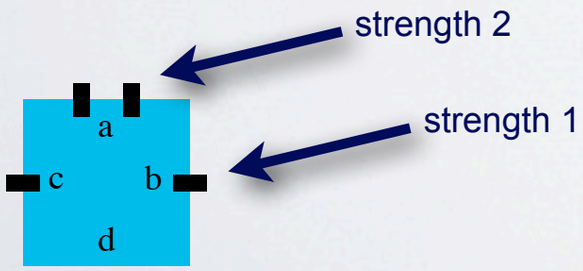

- Finite set of unit-sized square **tiles**
  - non-rotatable, unlimited supply of each tile type
- Each side has a **glue** (a,b,c,d,...)
- Each glue has a **strength** (0,1,2,3,...)
- **Tile assembly system:** is a [**tile set**, **seed tile**, **temperature** (0,1,2,3,...)]
- Growth begins from the **seed** tile at (0,0) in Z^2
- A tile **sticks** to an assembly if enough of its glues match so that the sum of the strengths of the matching glues is at least the **temperature**

Abstract tile assembly model

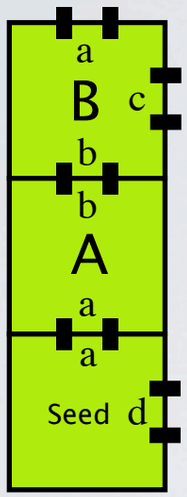

Tile assembly system:
tile set, seed tile, temperature

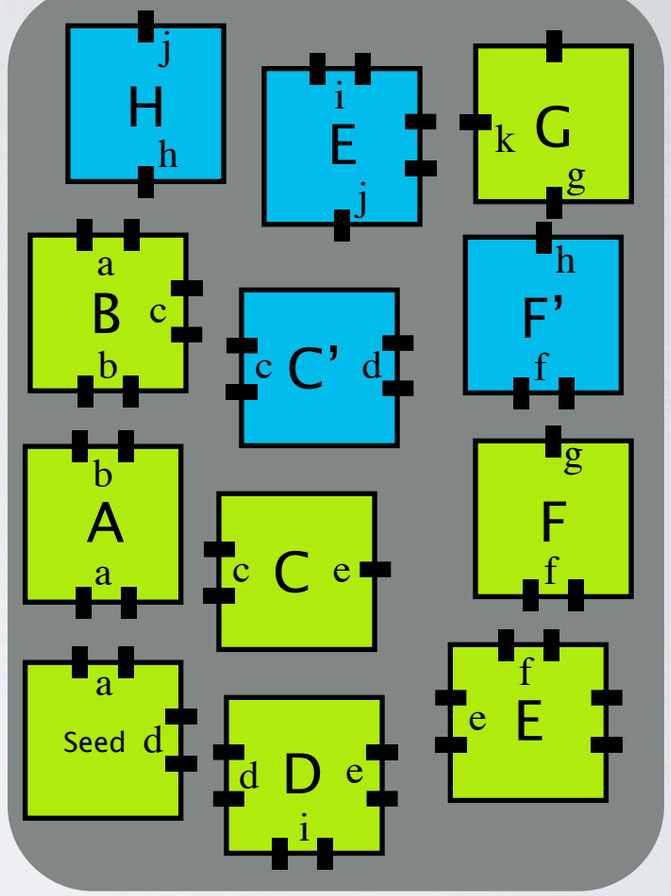

Temperature = 2

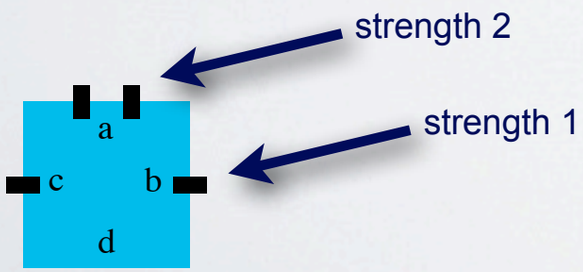

- Finite set of unit-sized square **tiles**
  - non-rotatable, unlimited supply of each tile type
- Each side has a **glue** (a,b,c,d,...)
- Each glue has a **strength** (0,1,2,3,...)
- **Tile assembly system:** is a [**tile set**, **seed tile**, **temperature** (0,1,2,3,...)]
- Growth begins from the **seed** tile at (0,0) in Z^2
- A tile **sticks** to an assembly if enough of its glues match so that the sum of the strengths of the matching glues is at least the **temperature**

Abstract tile assembly model

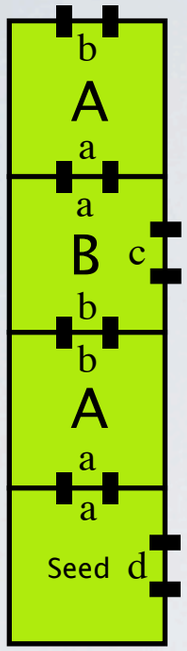

Tile assembly system:
tile set, seed tile, temperature

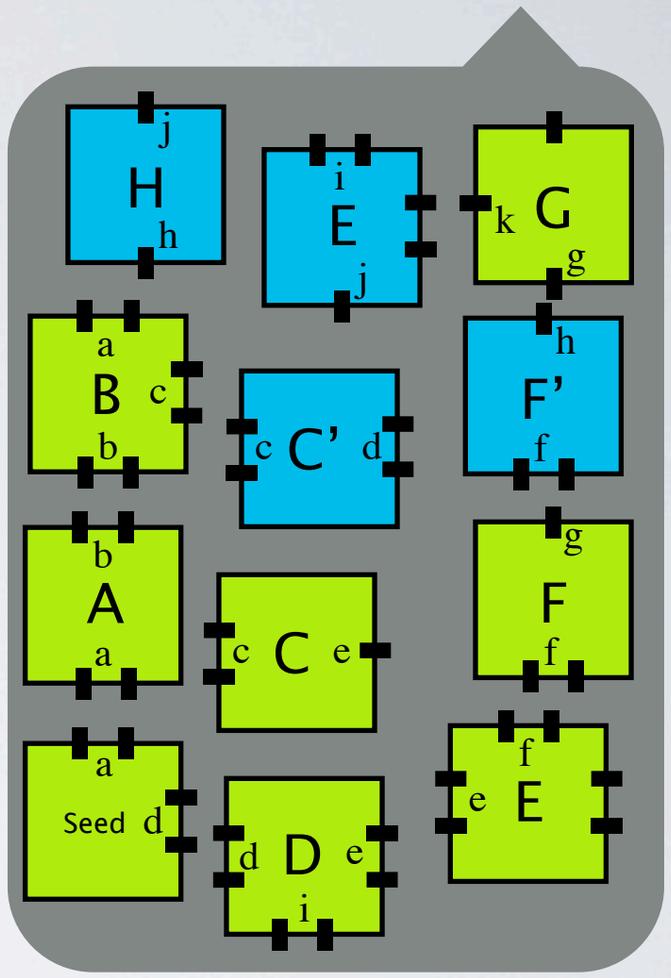

Temperature = 2

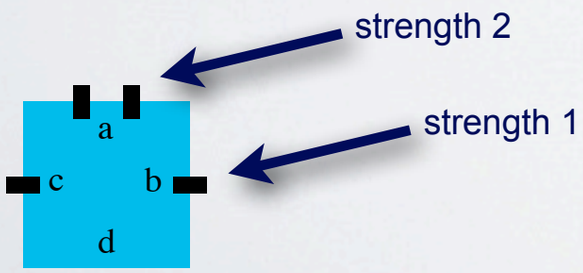

- Finite set of unit-sized square **tiles**
  - non-rotatable, unlimited supply of each tile type
- Each side has a **glue** (a,b,c,d,...)
- Each glue has a **strength** (0,1,2,3,...)
- **Tile assembly system:** is a [**tile set**, **seed tile**, **temperature** (0,1,2,3,...)]
- Growth begins from the **seed** tile at (0,0) in Z^2
- A tile **sticks** to an assembly if enough of its glues match so that the sum of the strengths of the matching glues is at least the **temperature**

Abstract tile assembly model

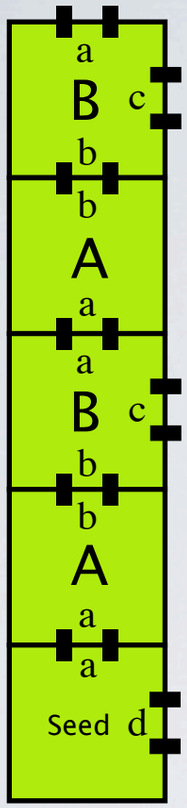

Tile assembly system:
tile set, seed tile, temperature

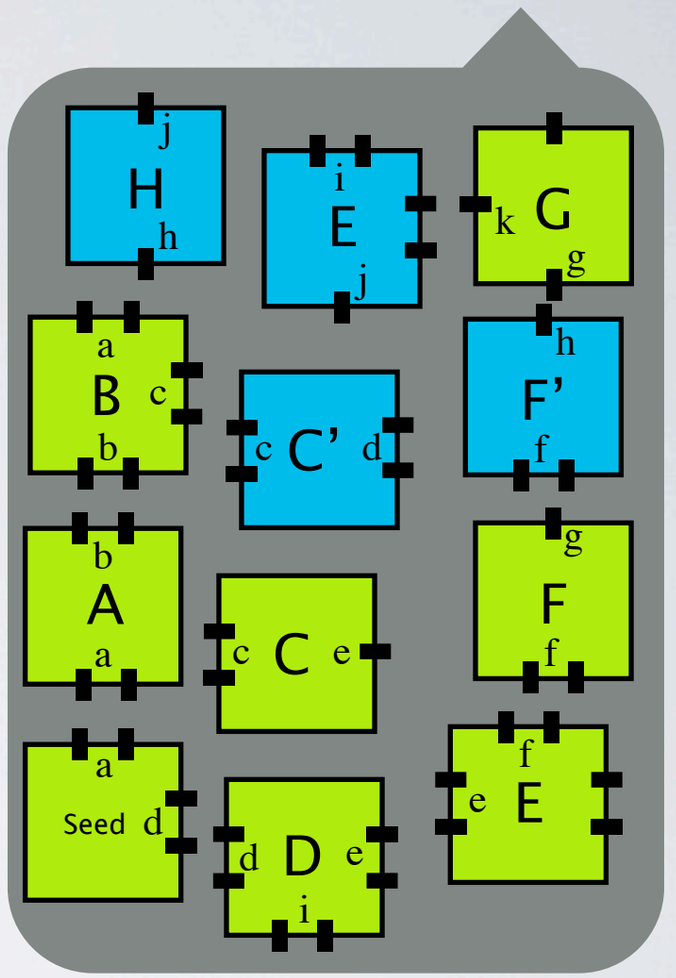

Temperature = 2

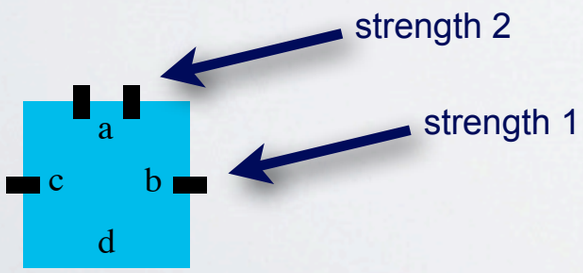

- Finite set of unit-sized square **tiles**
  - non-rotatable, unlimited supply of each tile type
- Each side has a **glue** (a,b,c,d,...)
- Each glue has a **strength** (0,1,2,3,...)
- **Tile assembly system:** is a [**tile set**, **seed tile**, **temperature** (0,1,2,3,...)]
- Growth begins from the **seed** tile at (0,0) in Z^2
- A tile **sticks** to an assembly if enough of its glues match so that the sum of the strengths of the matching glues is at least the **temperature**

Abstract tile assembly model

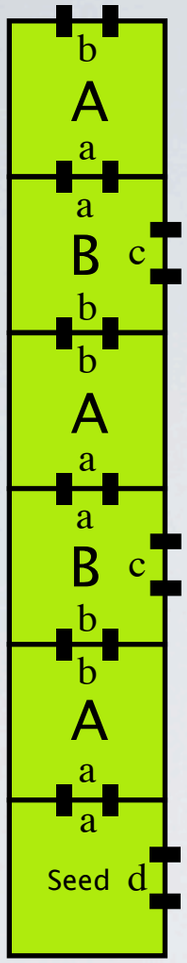

Tile assembly system:
tile set, seed tile, temperature

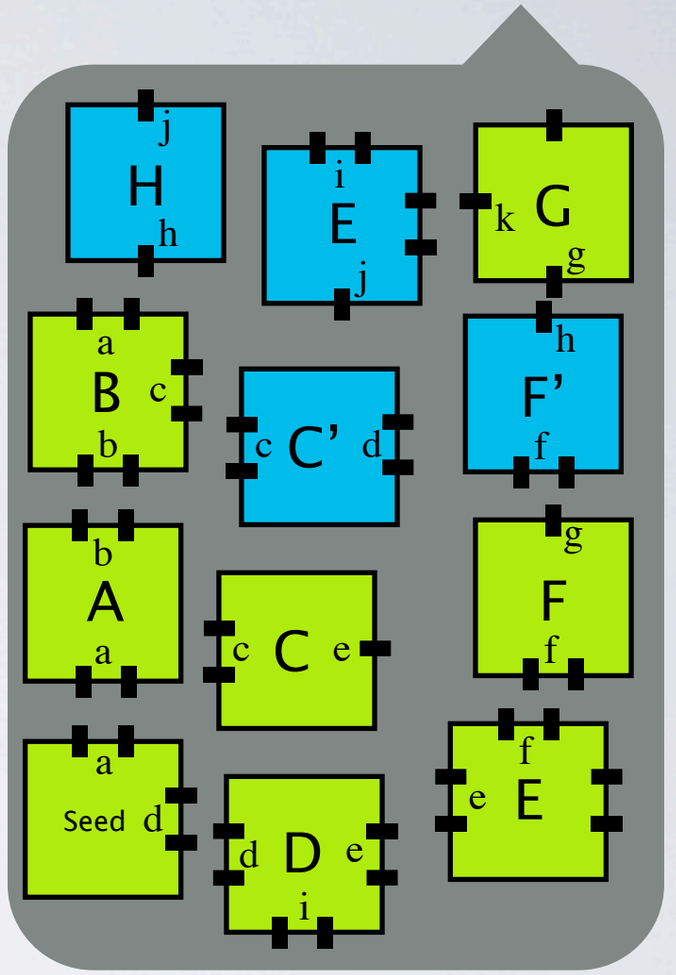

Temperature = 2

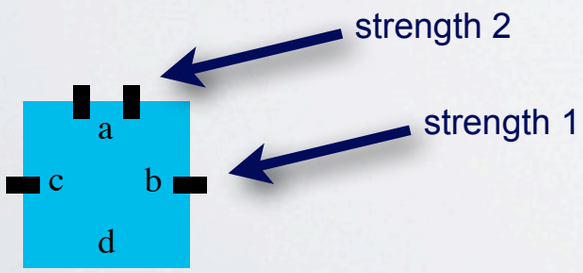

- Finite set of unit-sized square **tiles**
  - non-rotatable, unlimited supply of each tile type
- Each side has a **glue** (a,b,c,d,...)
- Each glue has a **strength** (0,1,2,3,...)
- **Tile assembly system:** is a [**tile set**, **seed tile**, **temperature** (0,1,2,3,...)]
- Growth begins from the **seed** tile at (0,0) in Z^2
- A tile **sticks** to an assembly if enough of its glues match so that the sum of the strengths of the matching glues is at least the **temperature**

Abstract tile assembly model

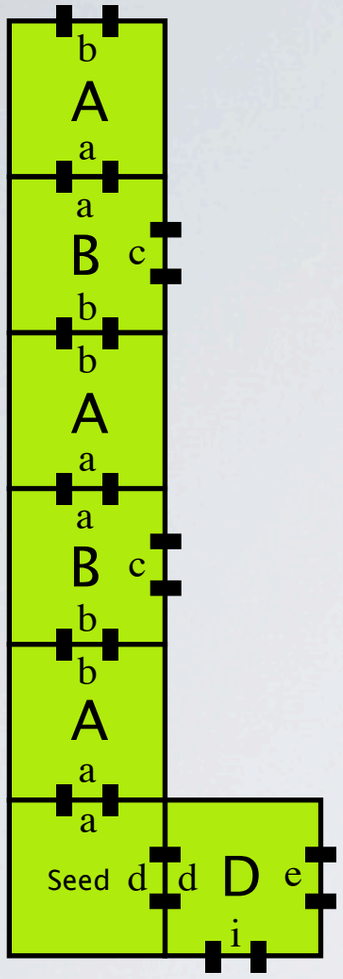

Tile assembly system:
tile set, seed tile, temperature

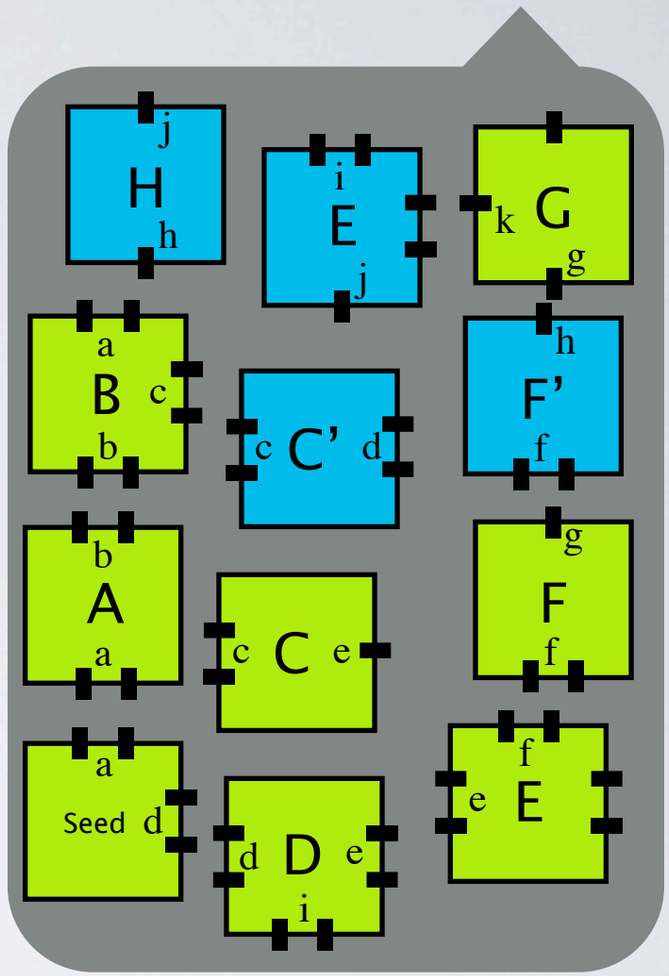

Temperature = 2

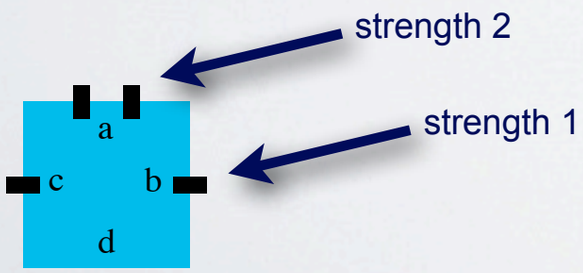

- Finite set of unit-sized square **tiles**
  - non-rotatable, unlimited supply of each tile type
- Each side has a **glue** (a,b,c,d,...)
- Each glue has a **strength** (0,1,2,3,...)
- **Tile assembly system:** is a [**tile set**, **seed tile**, **temperature** (0,1,2,3,...)]
- Growth begins from the **seed** tile at (0,0) in Z^2
- A tile **sticks** to an assembly if enough of its glues match so that the sum of the strengths of the matching glues is at least the **temperature**

Abstract tile assembly model

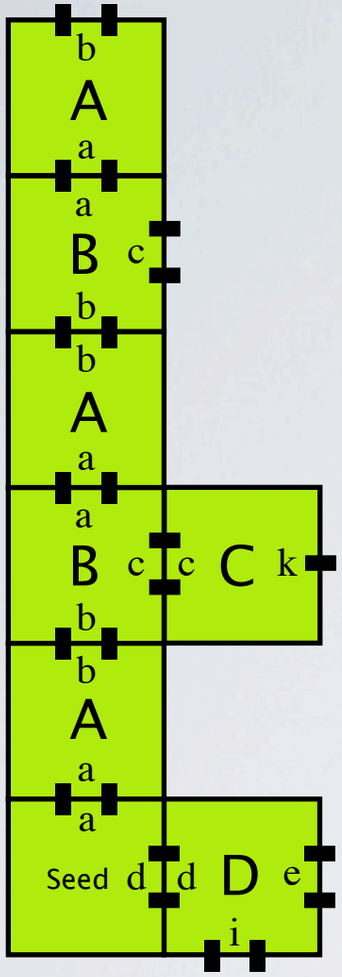

Tile assembly system:
tile set, seed tile, temperature

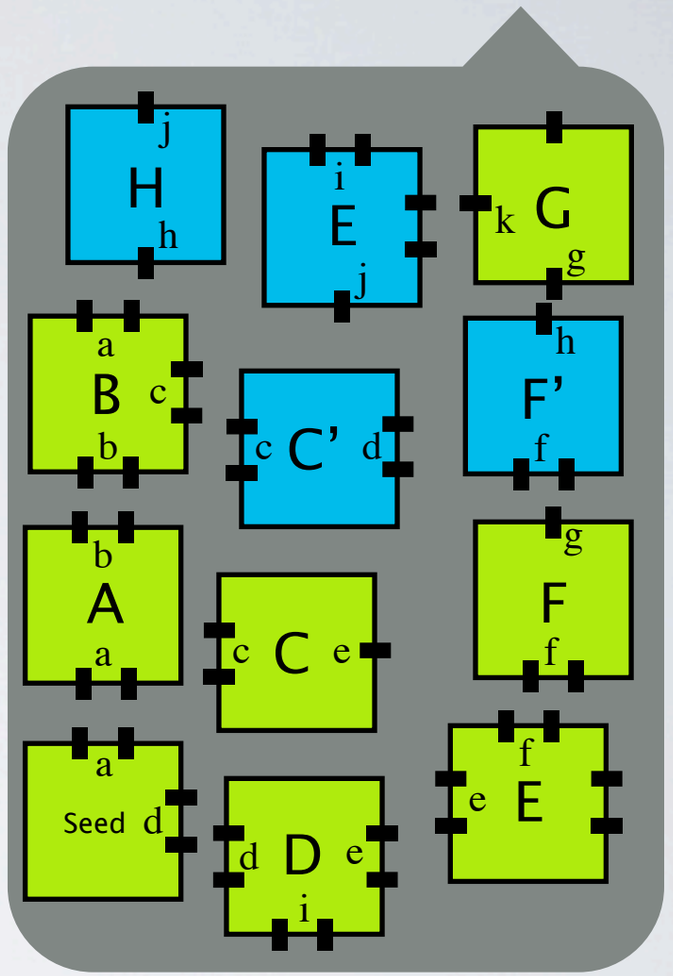

Temperature = 2

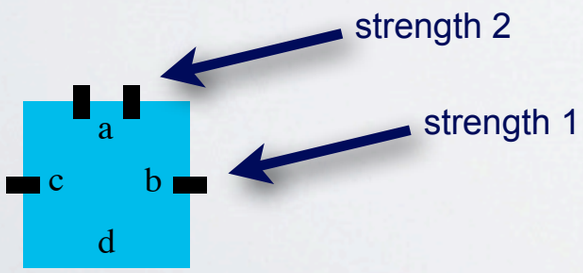

- Finite set of unit-sized square **tiles**
  - non-rotatable, unlimited supply of each tile type
- Each side has a **glue** (a,b,c,d,...)
- Each glue has a **strength** (0,1,2,3,...)
- **Tile assembly system:** is a [**tile set**, **seed tile**, **temperature** (0,1,2,3,...)]
- Growth begins from the **seed** tile at (0,0) in Z^2
- A tile **sticks** to an assembly if enough of its glues match so that the sum of the strengths of the matching glues is at least the **temperature**

Abstract tile assembly model

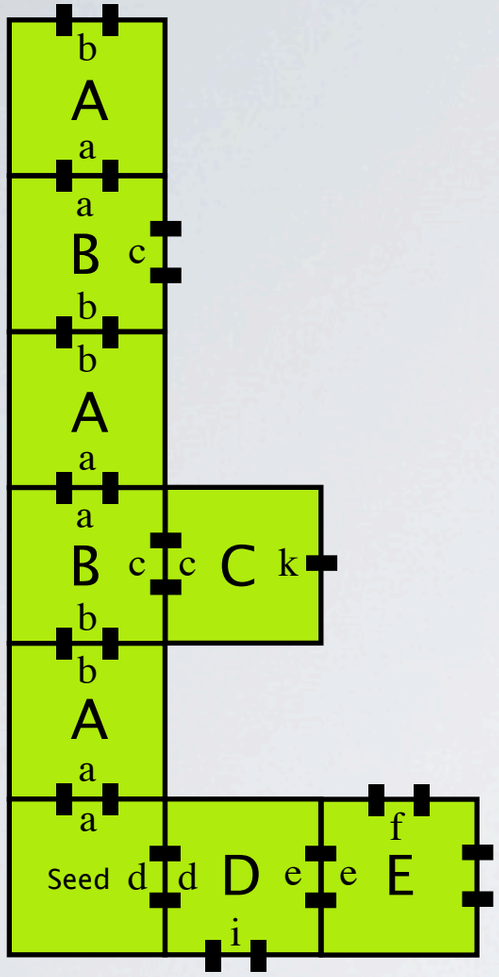

Tile assembly system:
tile set, seed tile, temperature

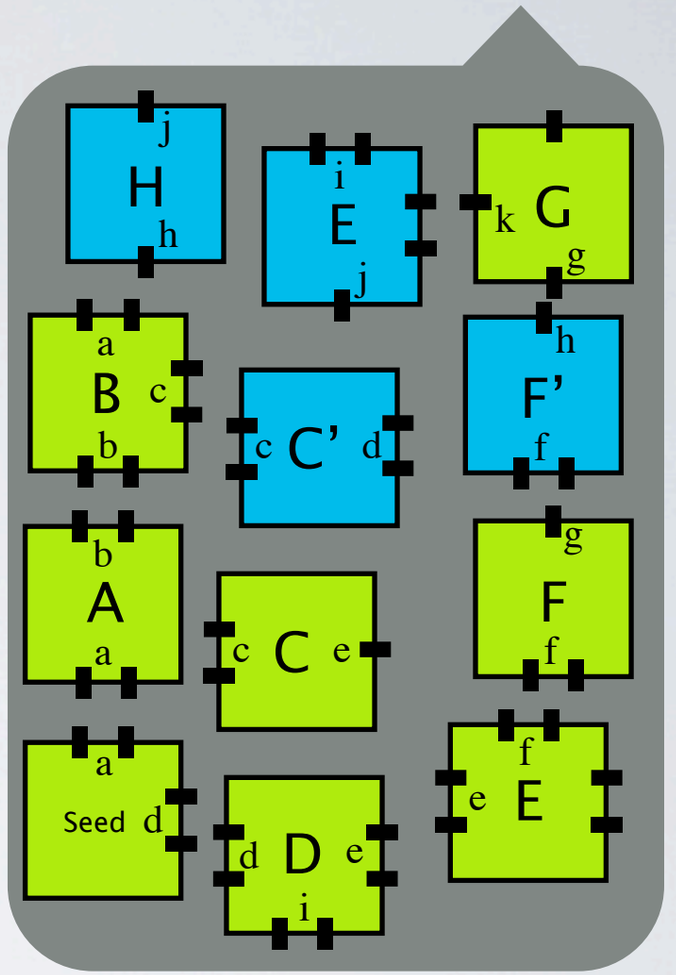

Temperature = 2

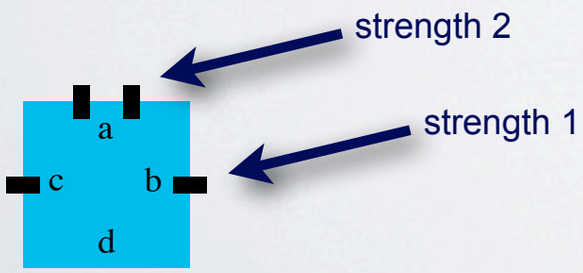

- Finite set of unit-sized square **tiles**
  - non-rotatable, unlimited supply of each tile type
- Each side has a **glue** (a,b,c,d,...)
- Each glue has a **strength** (0,1,2,3,...)
- **Tile assembly system:** is a [**tile set**, **seed tile**, **temperature** (0,1,2,3,...)]
- Growth begins from the **seed** tile at (0,0) in Z^2
- A tile **sticks** to an assembly if enough of its glues match so that the sum of the strengths of the matching glues is at least the **temperature**

Abstract tile assembly model

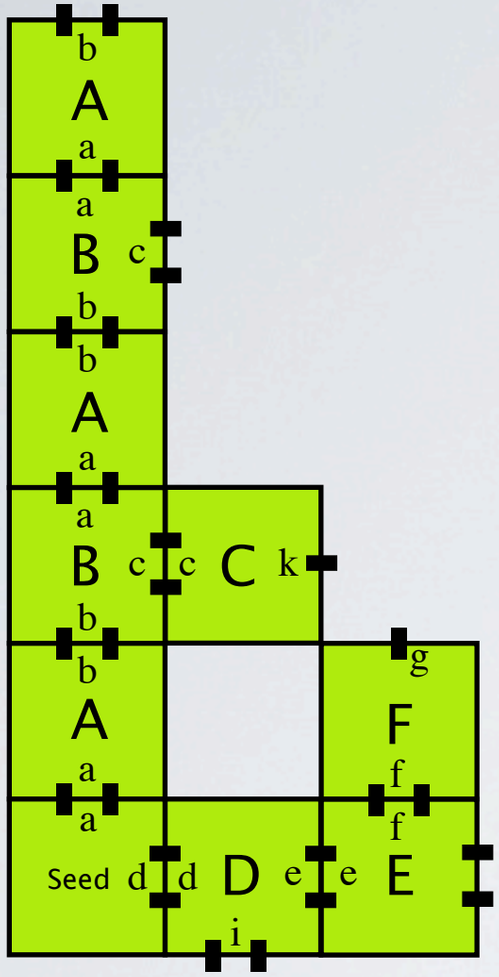

Tile assembly system:
tile set, seed tile, temperature

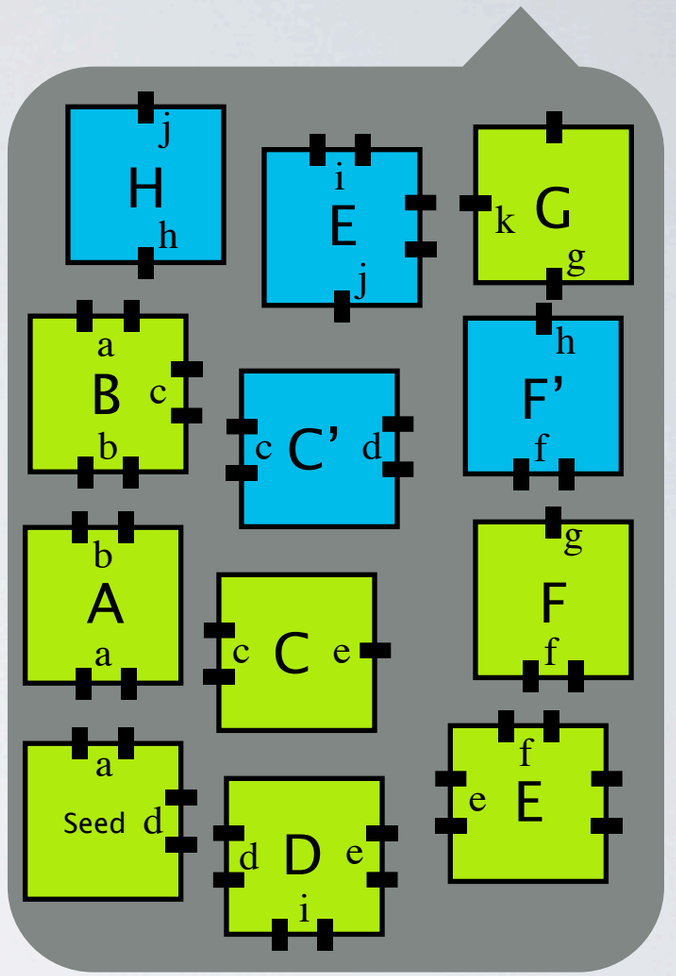

Temperature = 2

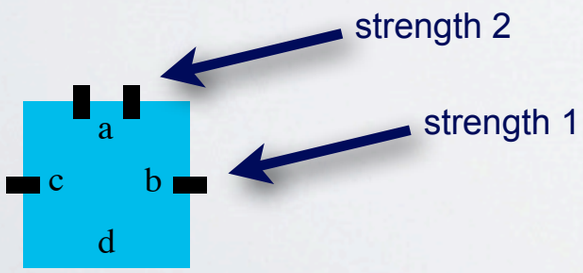

- Finite set of unit-sized square **tiles**
  - non-rotatable, unlimited supply of each tile type
- Each side has a **glue** (a,b,c,d,...)
- Each glue has a **strength** (0,1,2,3,...)
- **Tile assembly system:** is a [**tile set**, **seed tile**, **temperature** (0,1,2,3,...)]
- Growth begins from the **seed** tile at (0,0) in Z^2
- A tile **sticks** to an assembly if enough of its glues match so that the sum of the strengths of the matching glues is at least the **temperature**

Abstract tile assembly model

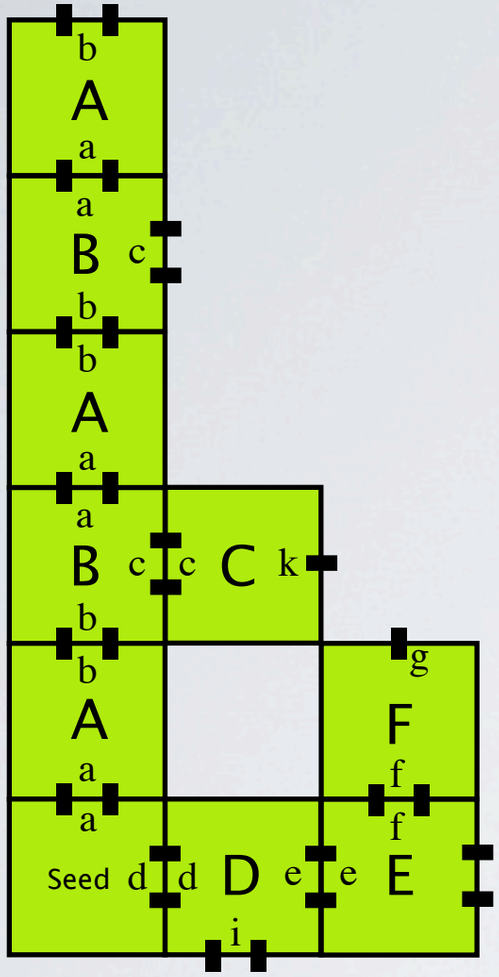

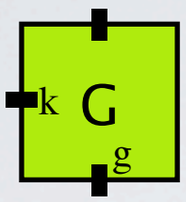

Tile assembly system:
tile set, seed tile, temperature

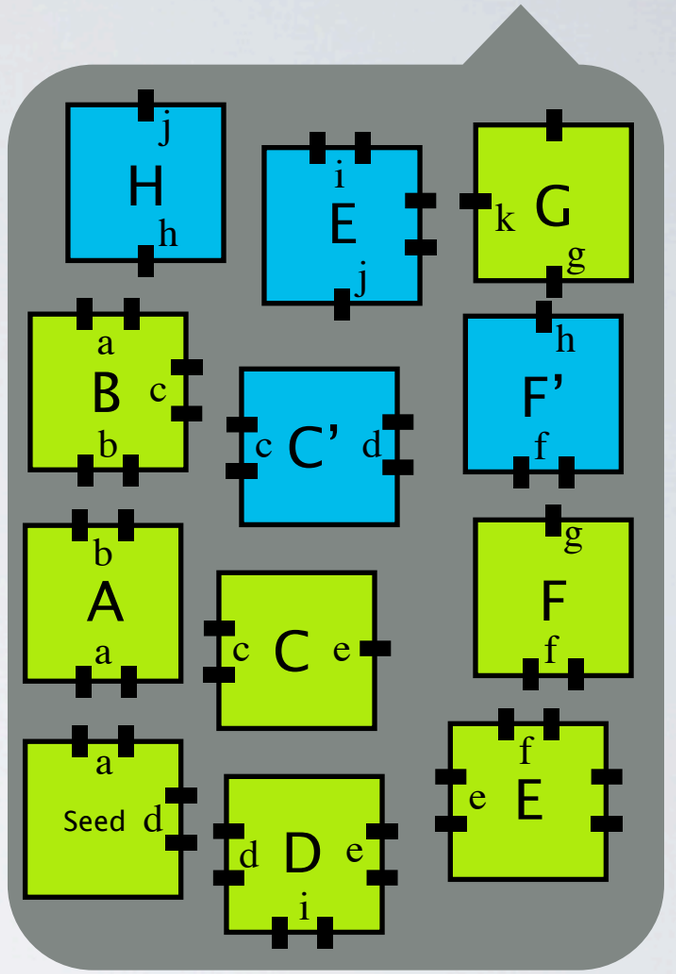

Temperature = 2

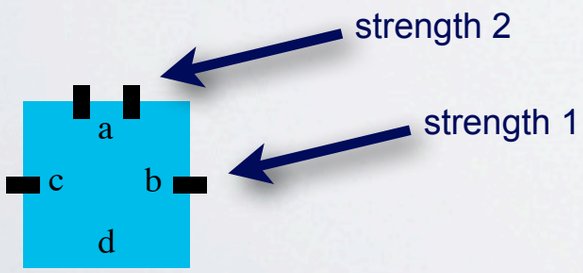

- Finite set of unit-sized square **tiles**
  - non-rotatable, unlimited supply of each tile type
- Each side has a **glue** (a,b,c,d,...)
- Each glue has a **strength** (0,1,2,3,...)
- **Tile assembly system:** is a [**tile set**, **seed tile**, **temperature** (0,1,2,3,...)]
- Growth begins from the **seed** tile at (0,0) in Z^2
- A tile **sticks** to an assembly if enough of its glues match so that the sum of the strengths of the matching glues is at least the **temperature**

Abstract tile assembly model

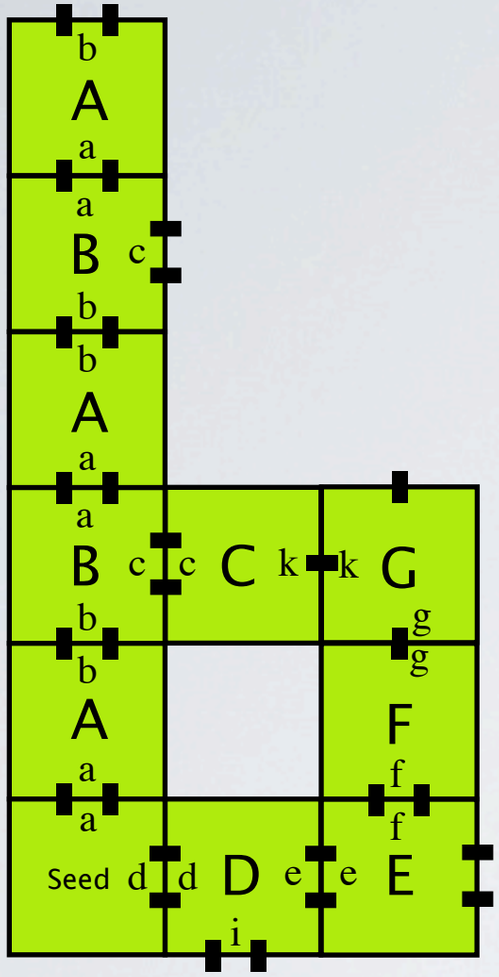

Tile assembly system:
tile set, seed tile, temperature

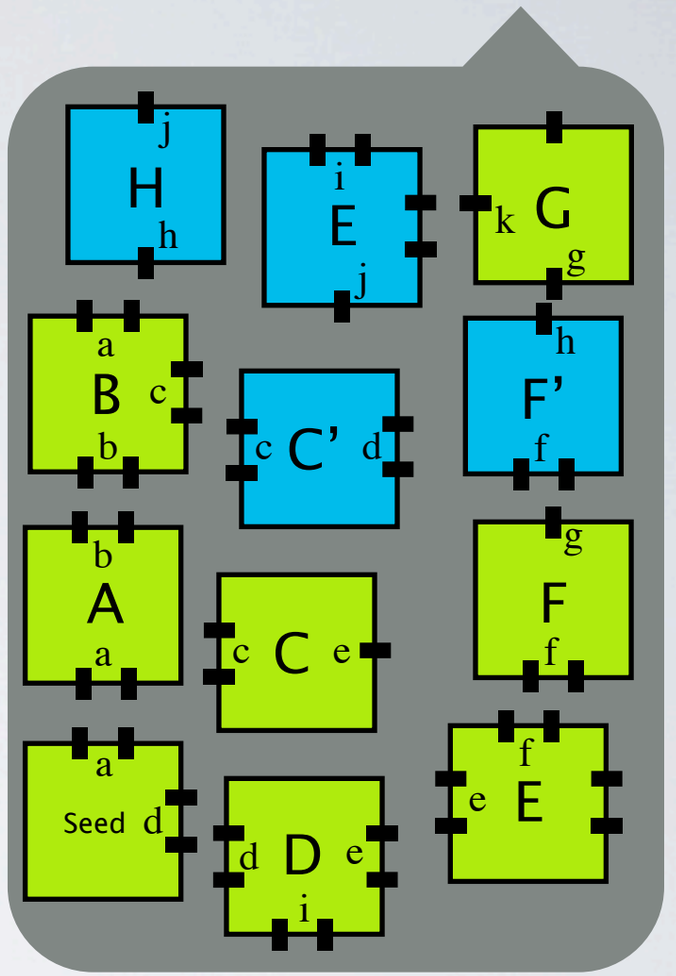

Temperature = 2

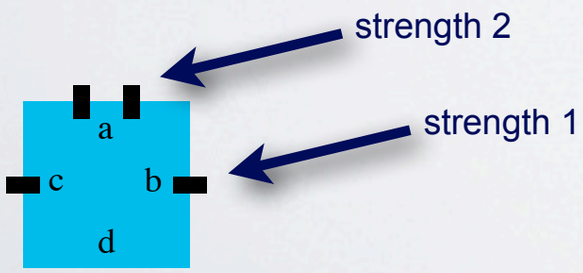

- Finite set of unit-sized square **tiles**
  - non-rotatable, unlimited supply of each tile type
- Each side has a **glue** (a,b,c,d,...)
- Each glue has a **strength** (0,1,2,3,...)
- **Tile assembly system:** is a [**tile set**, **seed tile**, **temperature** (0,1,2,3,...)]
- Growth begins from the **seed** tile at (0,0) in Z^2
- A tile **sticks** to an assembly if enough of its glues match so that the sum of the strengths of the matching glues is at least the **temperature**

Abstract tile assembly model

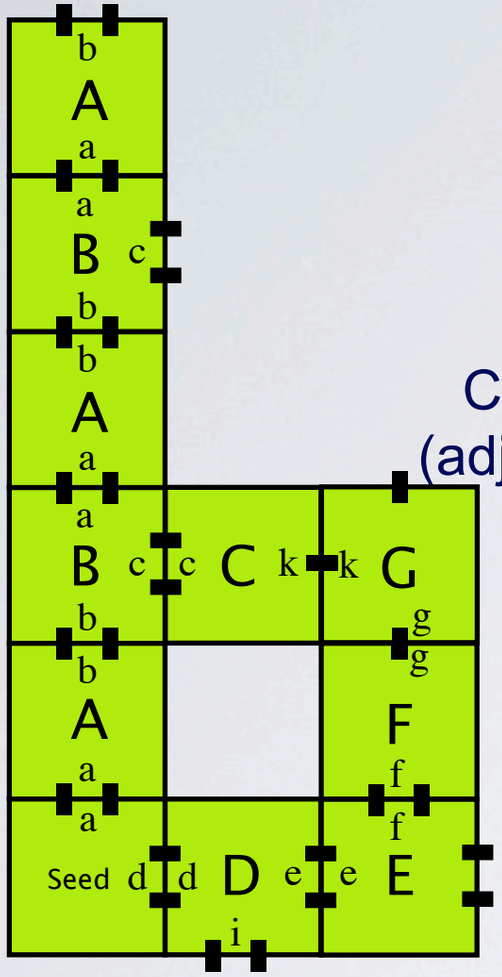

Cooperation
(adjacent sides)

Tile assembly system:
tile set, seed tile, temperature

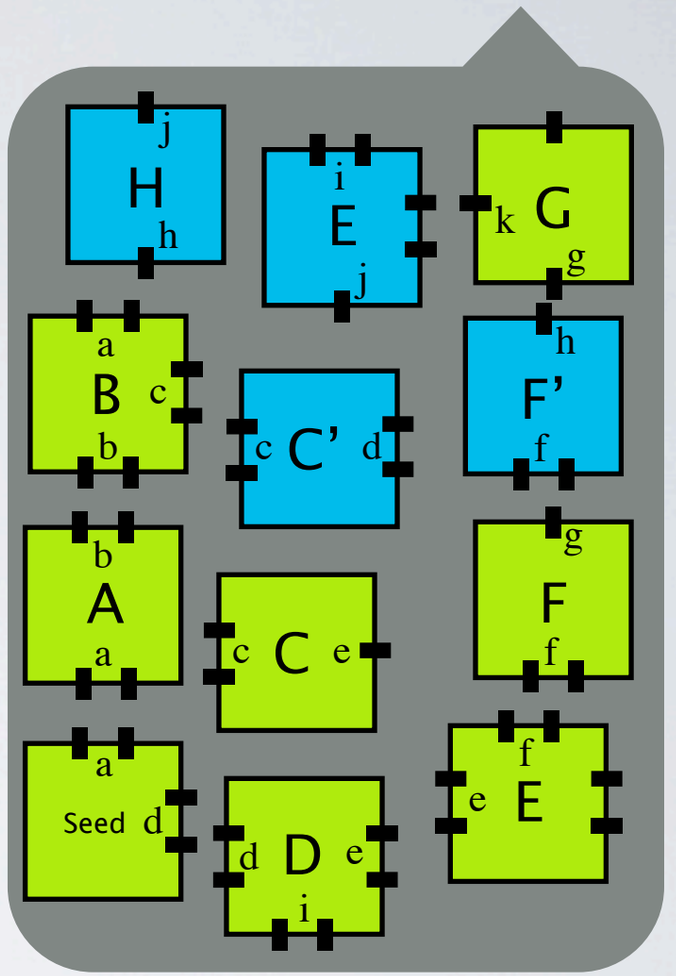

Temperature = 2

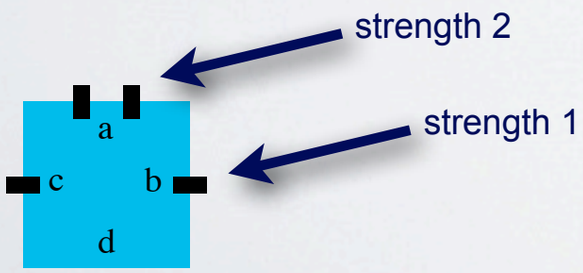

- Finite set of unit-sized square **tiles**
  - non-rotatable, unlimited supply of each tile type
- Each side has a **glue** (a,b,c,d,...)
- Each glue has a **strength** (0,1,2,3,...)
- **Tile assembly system:** is a [**tile set**, **seed tile**, **temperature** (0,1,2,3,...)]
- Growth begins from the **seed** tile at (0,0) in Z^2
- A tile **sticks** to an assembly if enough of its glues match so that the sum of the strengths of the matching glues is at least the **temperature**

Abstract tile assembly model

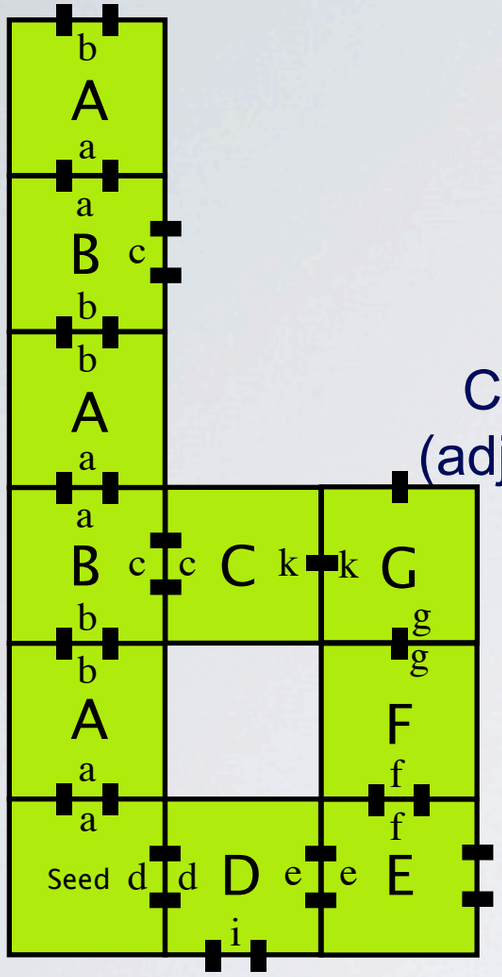

Cooperation
(adjacent sides)

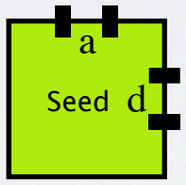

Tile assembly system:
tile set, seed tile, temperature

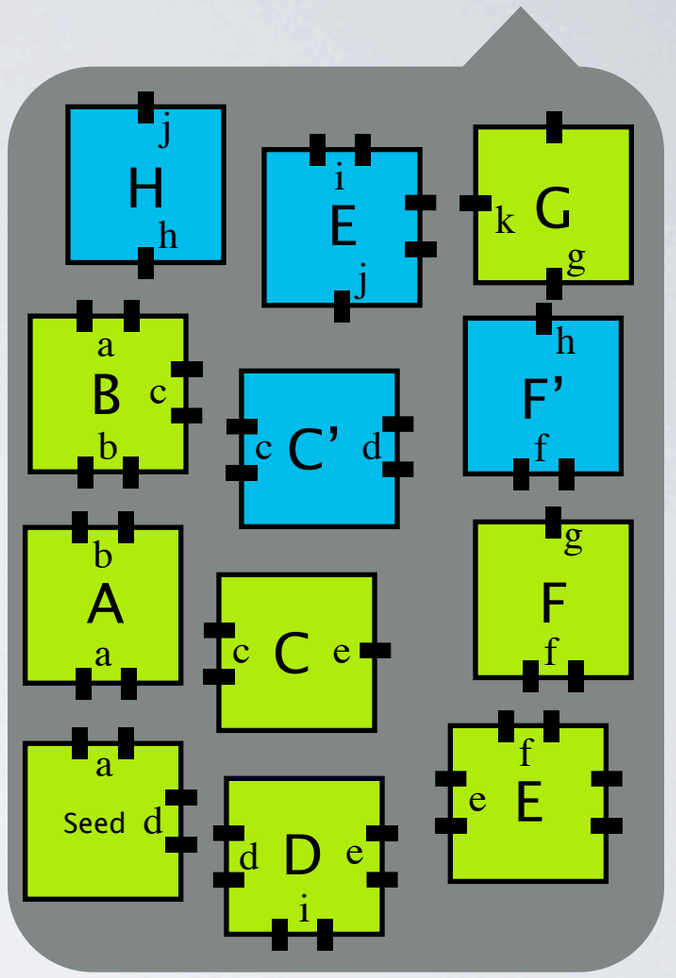

Temperature = 2

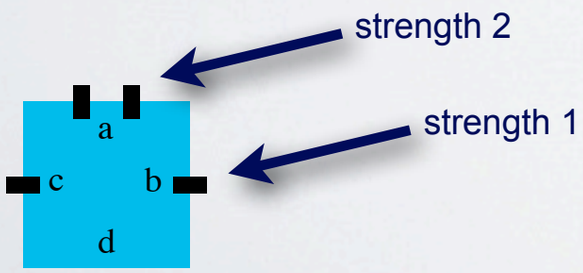

- Finite set of unit-sized square **tiles**
  - non-rotatable, unlimited supply of each tile type
- Each side has a **glue** (a,b,c,d,...)
- Each glue has a **strength** (0,1,2,3,...)
- **Tile assembly system:** is a [**tile set**, **seed tile**, **temperature** (0,1,2,3,...)]
- Growth begins from the **seed** tile at (0,0) in Z^2
- A tile **sticks** to an assembly if enough of its glues match so that the sum of the strengths of the matching glues is at least the **temperature**

Abstract tile assembly model

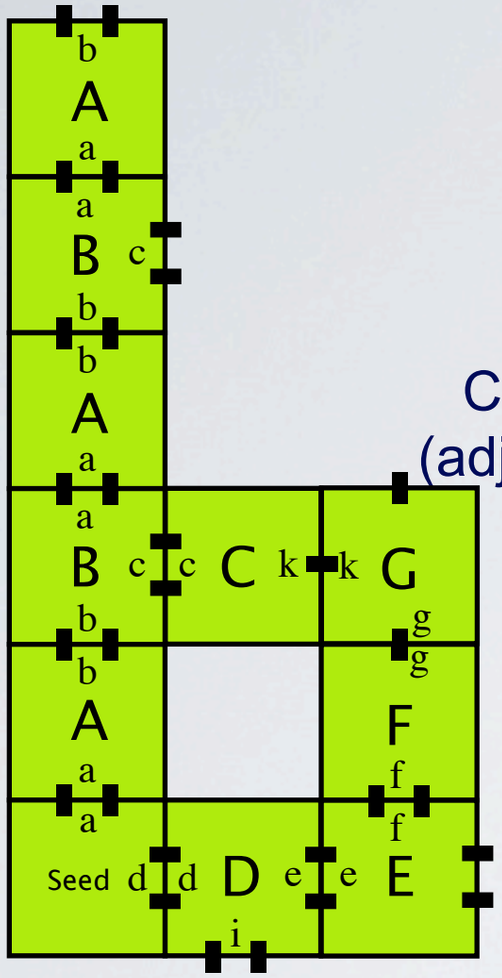

Cooperation
(adjacent sides)

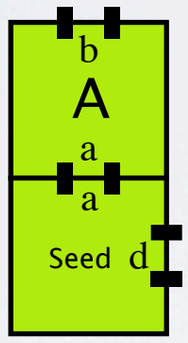

Tile assembly system:
tile set, seed tile, temperature

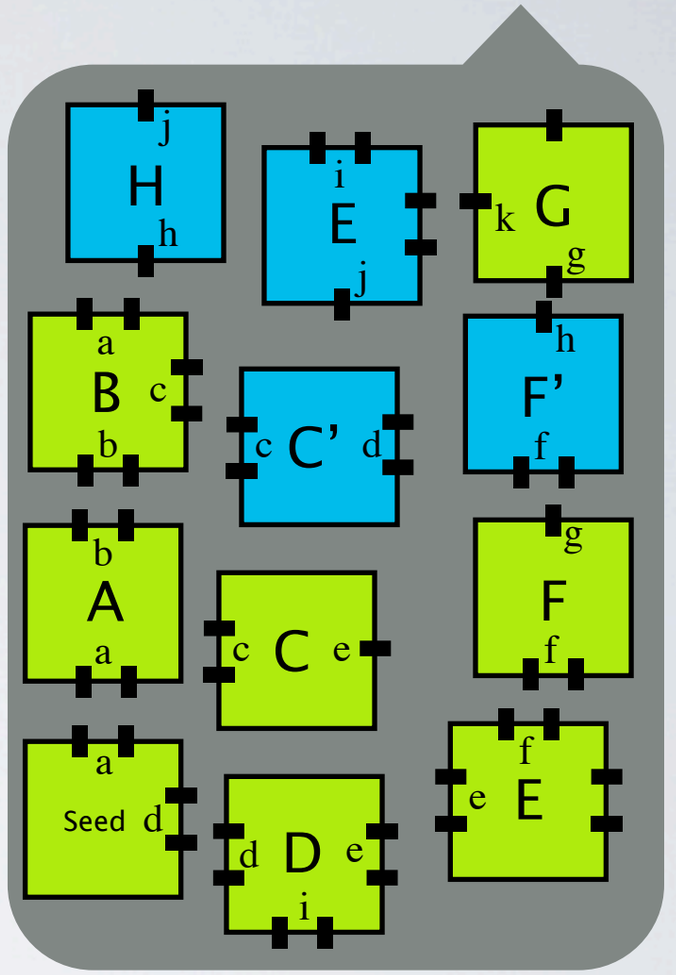

Temperature = 2

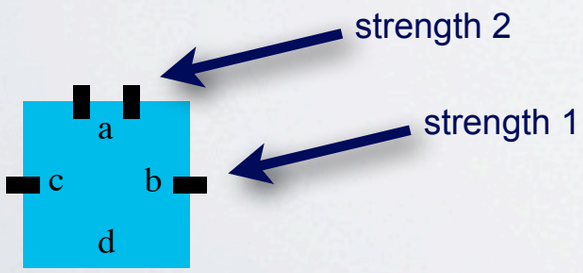

- Finite set of unit-sized square **tiles**
  - non-rotatable, unlimited supply of each tile type
- Each side has a **glue** (a,b,c,d,...)
- Each glue has a **strength** (0,1,2,3,...)
- **Tile assembly system:** is a [**tile set**, **seed tile**, **temperature** (0,1,2,3,...)]
- Growth begins from the **seed** tile at (0,0) in Z^2
- A tile **sticks** to an assembly if enough of its glues match so that the sum of the strengths of the matching glues is at least the **temperature**

Abstract tile assembly model

Tile assembly system:
tile set, seed tile, temperature

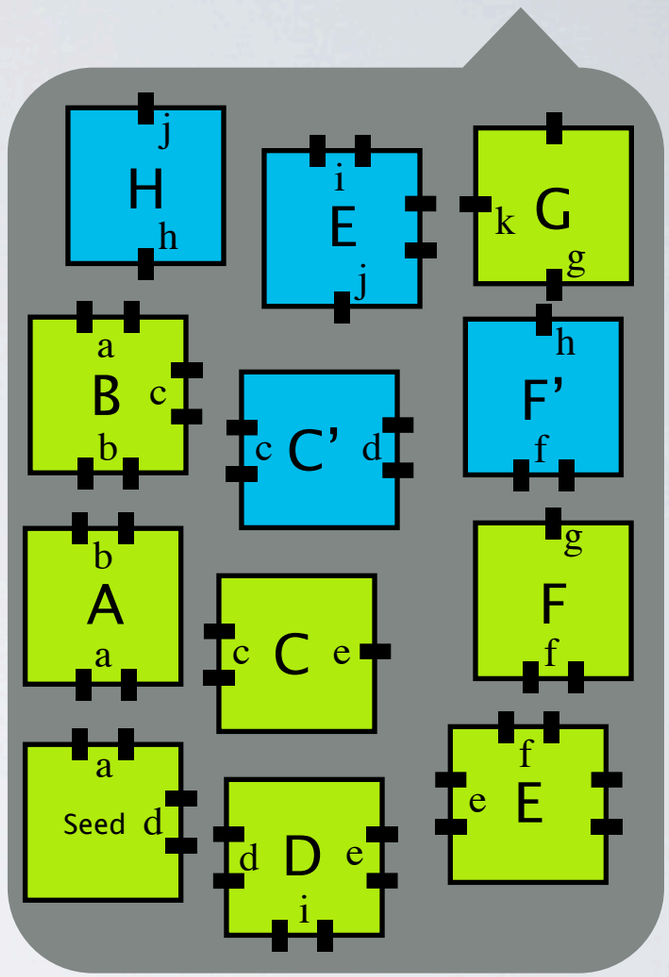

Temperature = 2

Cooperation
(adjacent sides)

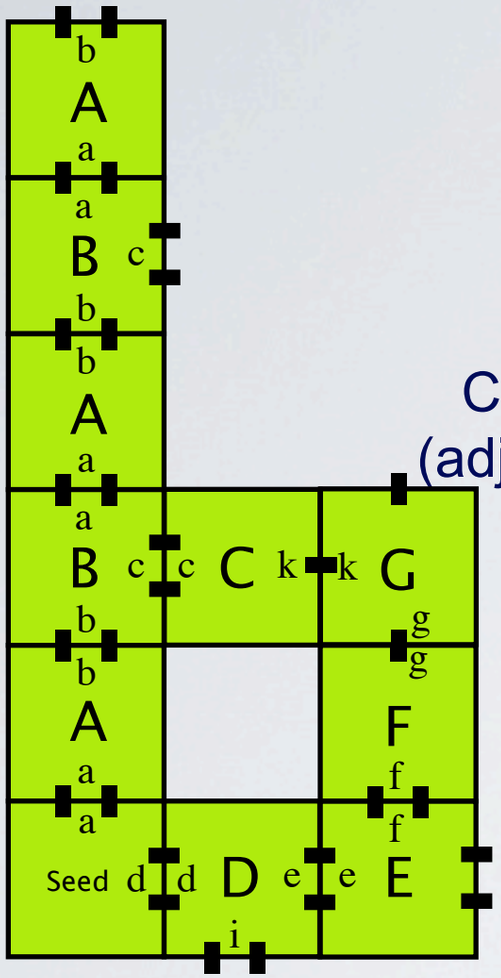

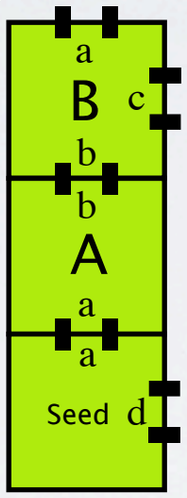

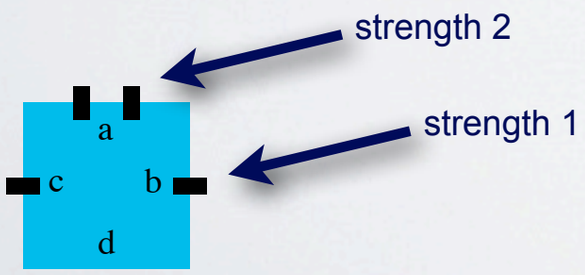

- Finite set of unit-sized square **tiles**
  - non-rotatable, unlimited supply of each tile type
- Each side has a **glue** (a,b,c,d,...)
- Each glue has a **strength** (0,1,2,3,...)
- **Tile assembly system:** is a [**tile set**, **seed tile**, **temperature** (0,1,2,3,...)]
- Growth begins from the **seed** tile at (0,0) in Z^2
- A tile **sticks** to an assembly if enough of its glues match so that the sum of the strengths of the matching glues is at least the **temperature**

Abstract tile assembly model

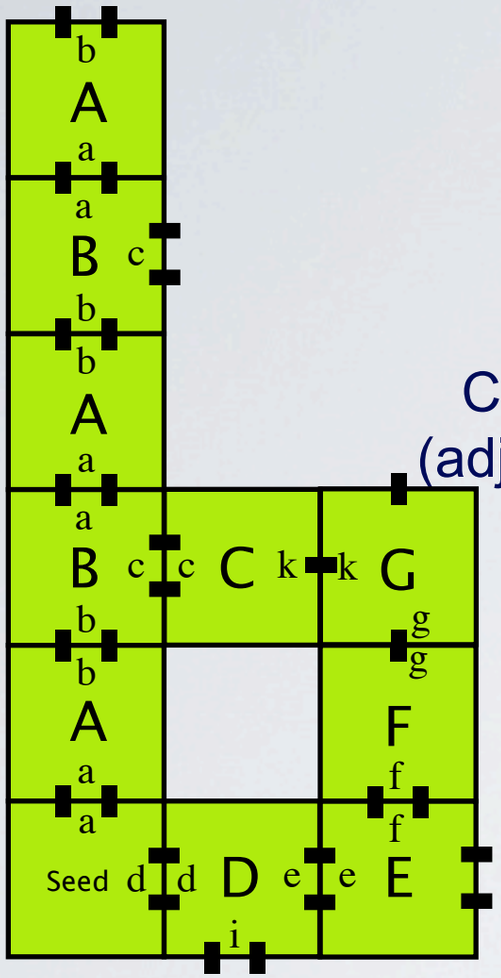

Cooperation
(adjacent sides)

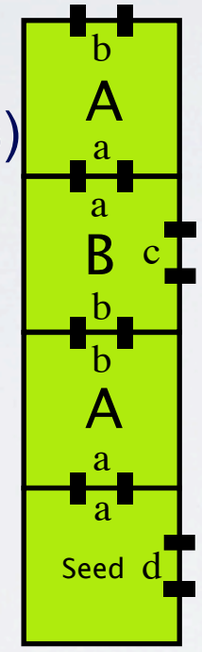

Tile assembly system:
tile set, seed tile, temperature

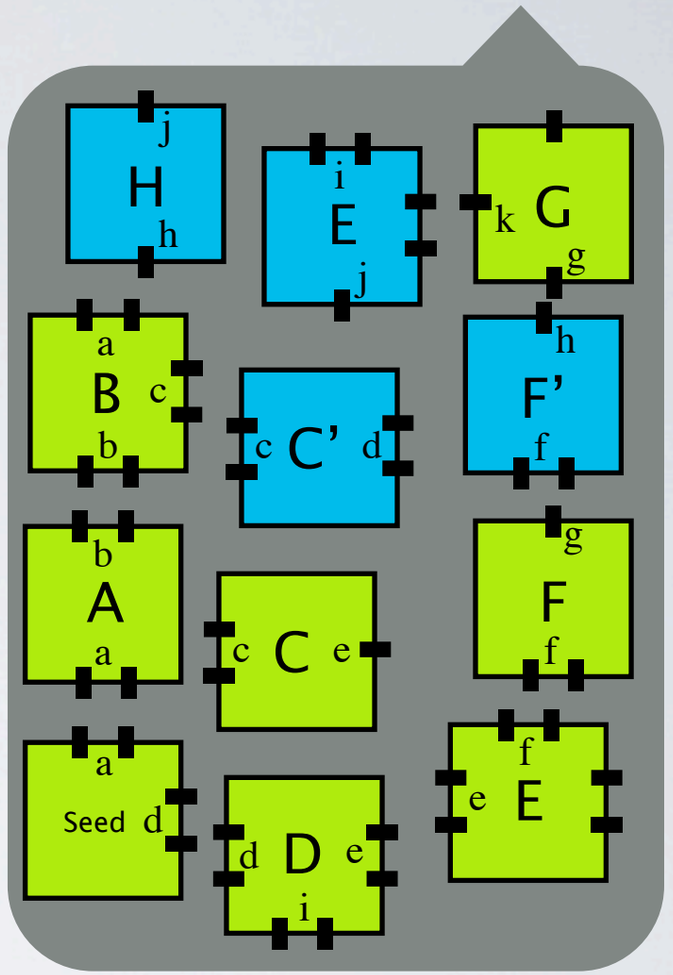

Temperature = 2

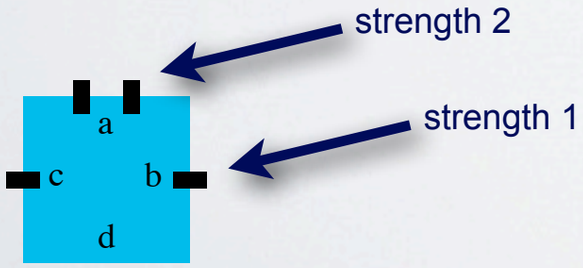

- Finite set of unit-sized square **tiles**
  - non-rotatable, unlimited supply of each tile type
- Each side has a **glue** (a,b,c,d,...)
- Each glue has a **strength** (0,1,2,3,...)
- **Tile assembly system:** is a [**tile set**, **seed tile**, **temperature** (0,1,2,3,...)]
- Growth begins from the **seed** tile at (0,0) in Z^2
- A tile **sticks** to an assembly if enough of its glues match so that the sum of the strengths of the matching glues is at least the **temperature**

Abstract tile assembly model

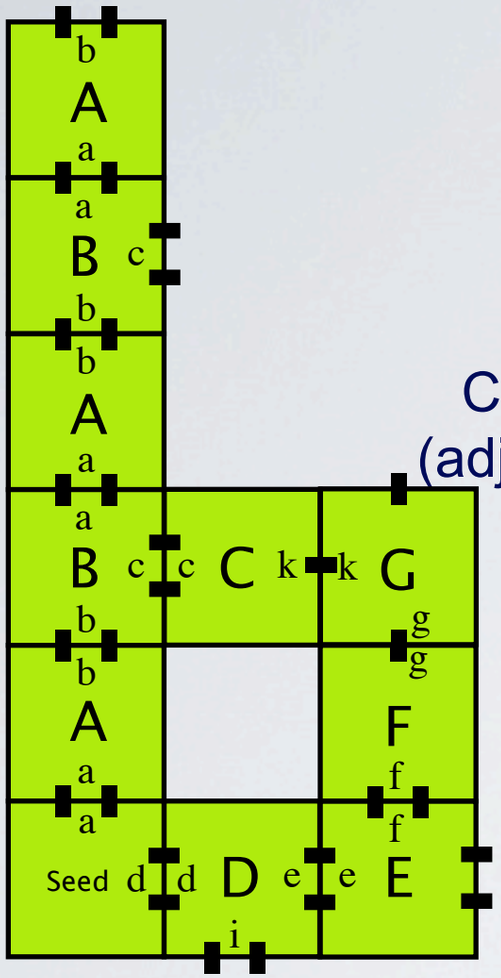

Cooperation
(adjacent sides)

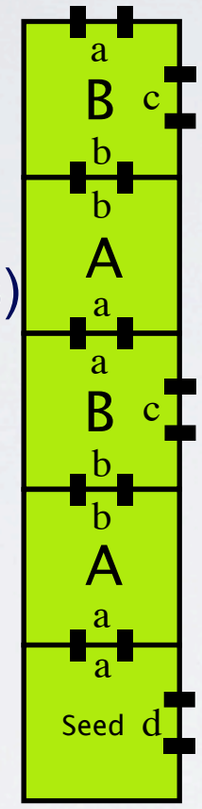

Tile assembly system:
tile set, seed tile, temperature

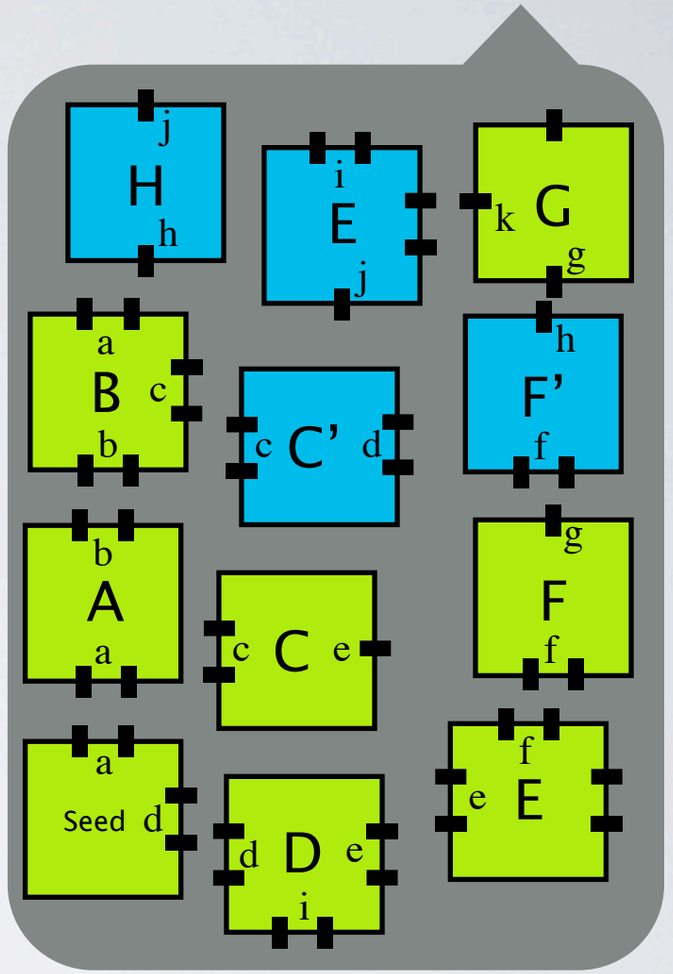

Temperature = 2

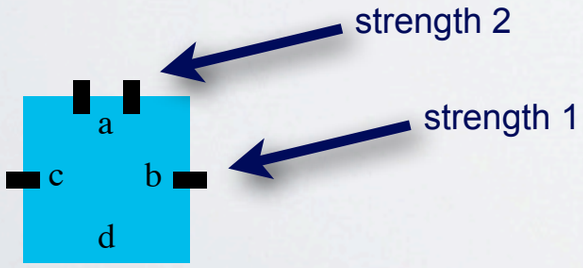

- Finite set of unit-sized square **tiles**
  - non-rotatable, unlimited supply of each tile type
- Each side has a **glue** (a,b,c,d,...)
- Each glue has a **strength** (0,1,2,3,...)
- **Tile assembly system:** is a [**tile set**, **seed tile**, **temperature** (0,1,2,3,...)]
- Growth begins from the **seed** tile at (0,0) in Z^2
- A tile **sticks** to an assembly if enough of its glues match so that the sum of the strengths of the matching glues is at least the **temperature**

Abstract tile assembly model

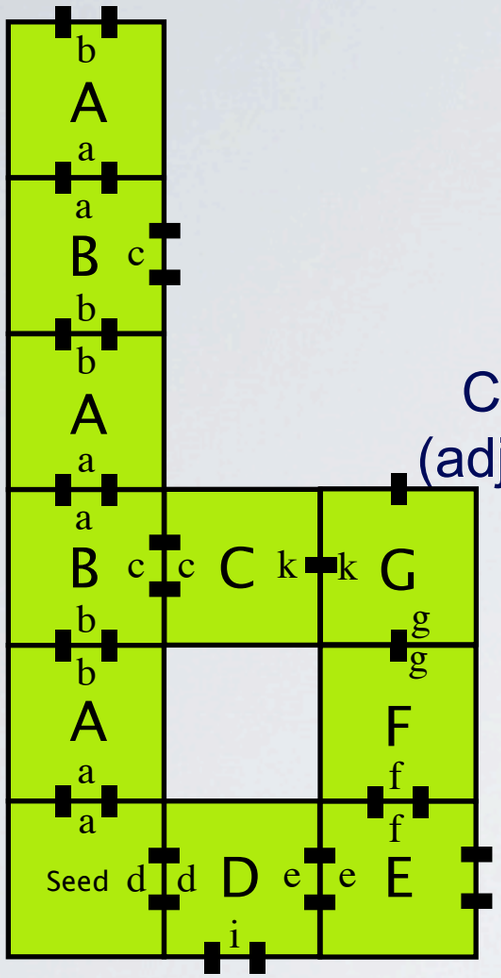

Cooperation
(adjacent sides)

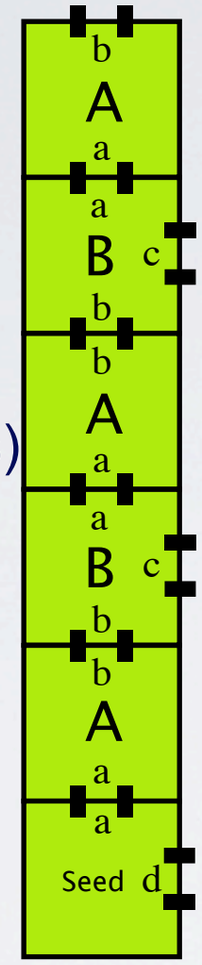

Tile assembly system:
tile set, seed tile, temperature

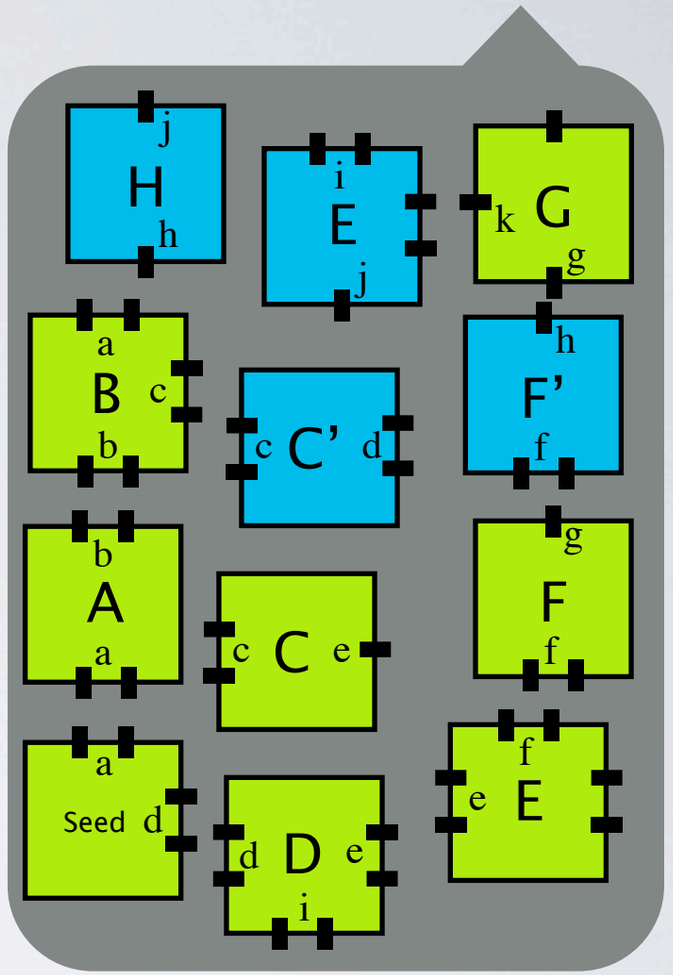

Temperature = 2

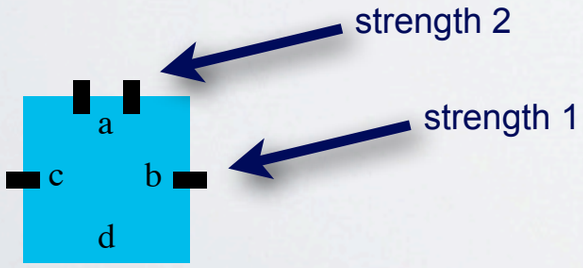

- Finite set of unit-sized square **tiles**
  - non-rotatable, unlimited supply of each tile type
- Each side has a **glue** (a,b,c,d,...)
- Each glue has a **strength** (0,1,2,3,...)
- **Tile assembly system:** is a [**tile set**, **seed tile**, **temperature** (0,1,2,3,...)]
- Growth begins from the **seed** tile at (0,0) in Z^2
- A tile **sticks** to an assembly if enough of its glues match so that the sum of the strengths of the matching glues is at least the **temperature**

Abstract tile assembly model

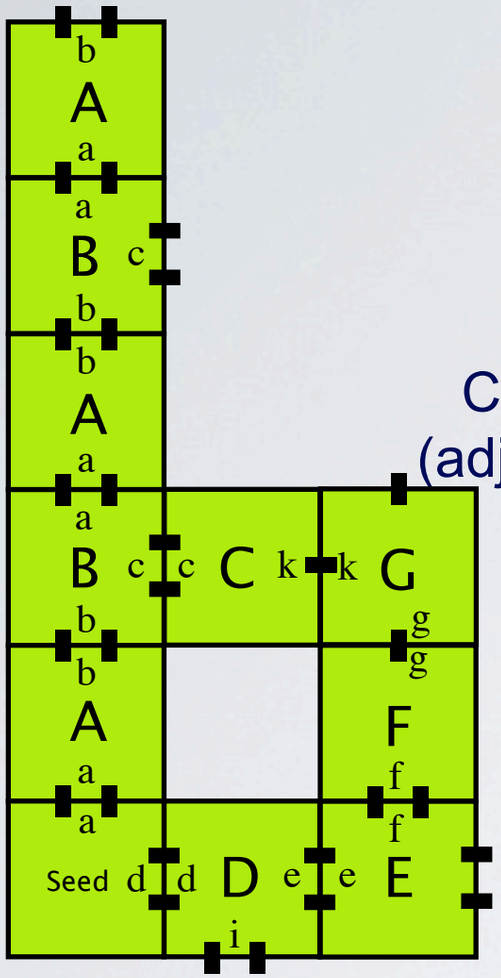

Cooperation
(adjacent sides)

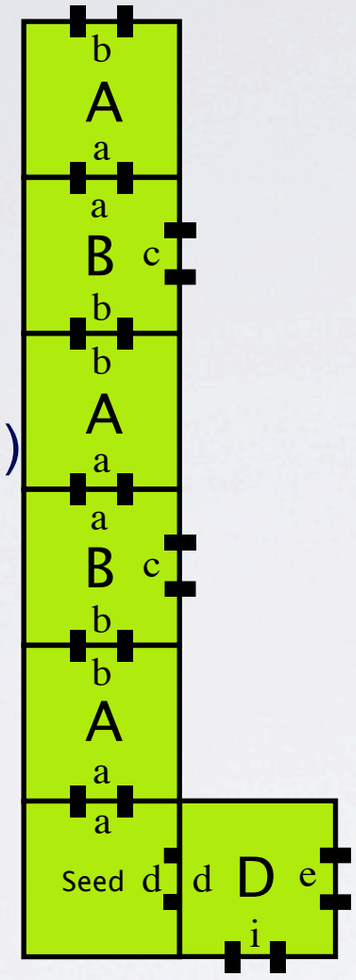

Tile assembly system:
tile set, seed tile, temperature

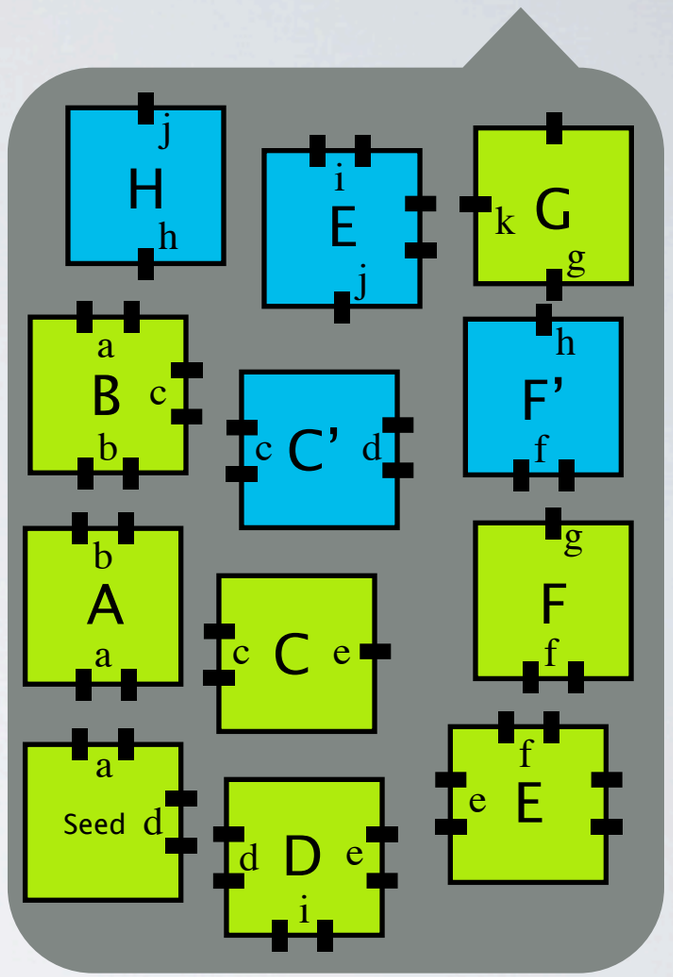

Temperature = 2

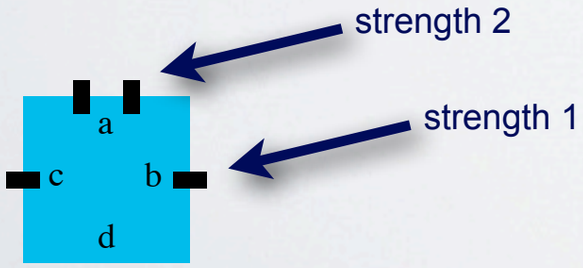

- Finite set of unit-sized square **tiles**
  - non-rotatable, unlimited supply of each tile type
- Each side has a **glue** (a,b,c,d,...)
- Each glue has a **strength** (0,1,2,3,...)
- **Tile assembly system:** is a [**tile set**, **seed tile**, **temperature** (0,1,2,3,...)]
- Growth begins from the **seed** tile at (0,0) in Z^2
- A tile **sticks** to an assembly if enough of its glues match so that the sum of the strengths of the matching glues is at least the **temperature**

Abstract tile assembly model

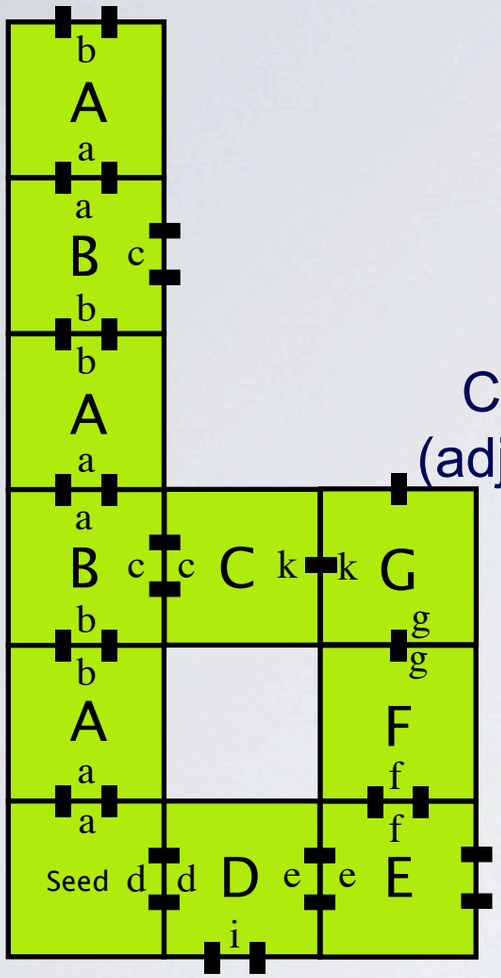

Cooperation
(adjacent sides)

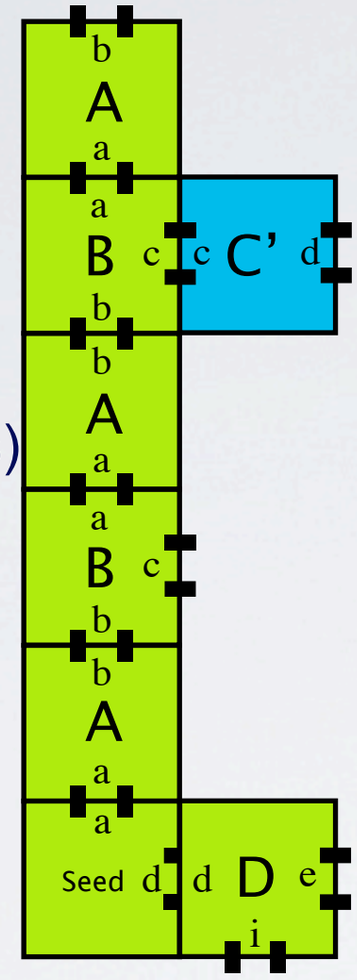

Tile assembly system:
tile set, seed tile, temperature

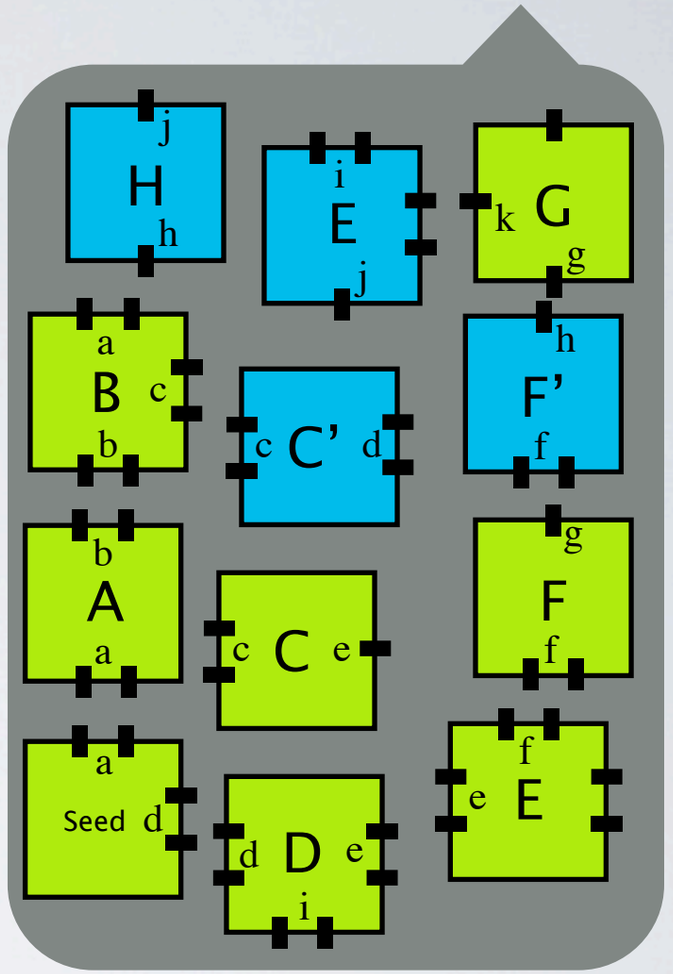

Temperature = 2

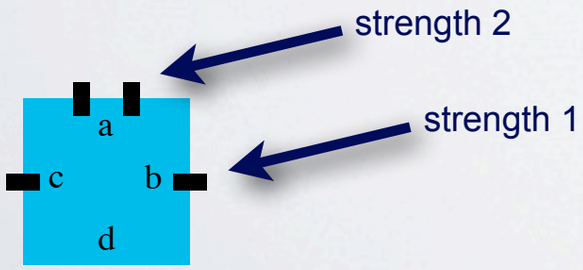

- Finite set of unit-sized square **tiles**
  - non-rotatable, unlimited supply of each tile type
- Each side has a **glue** (a,b,c,d,...)
- Each glue has a **strength** (0,1,2,3,...)
- **Tile assembly system:** is a [**tile set**, **seed tile**, **temperature** (0,1,2,3,...)]
- Growth begins from the **seed** tile at (0,0) in Z^2
- A tile **sticks** to an assembly if enough of its glues match so that the sum of the strengths of the matching glues is at least the **temperature**

Abstract tile assembly model

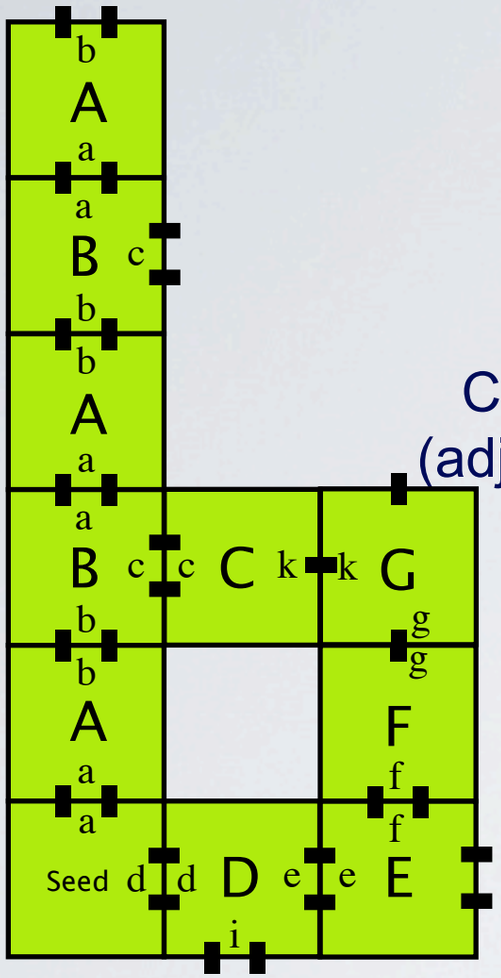

Cooperation
(adjacent sides)

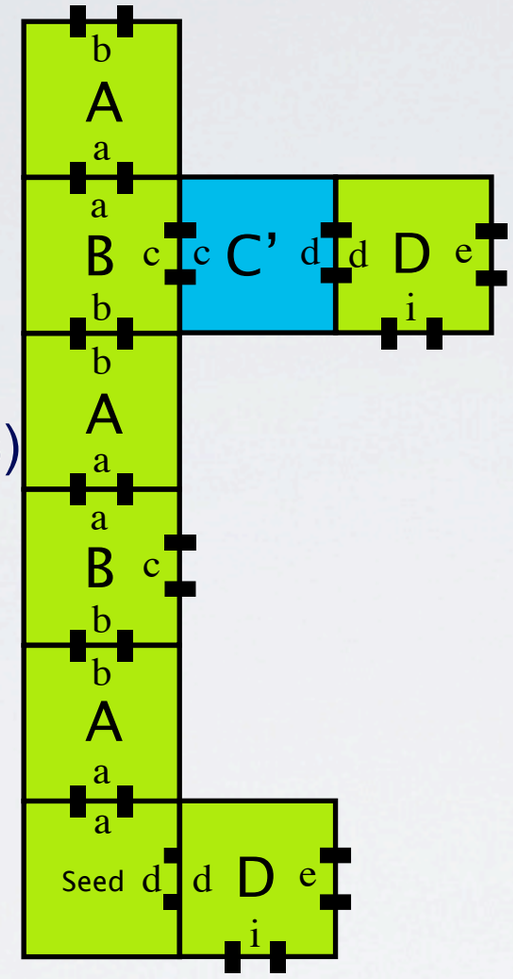

Tile assembly system:
tile set, seed tile, temperature

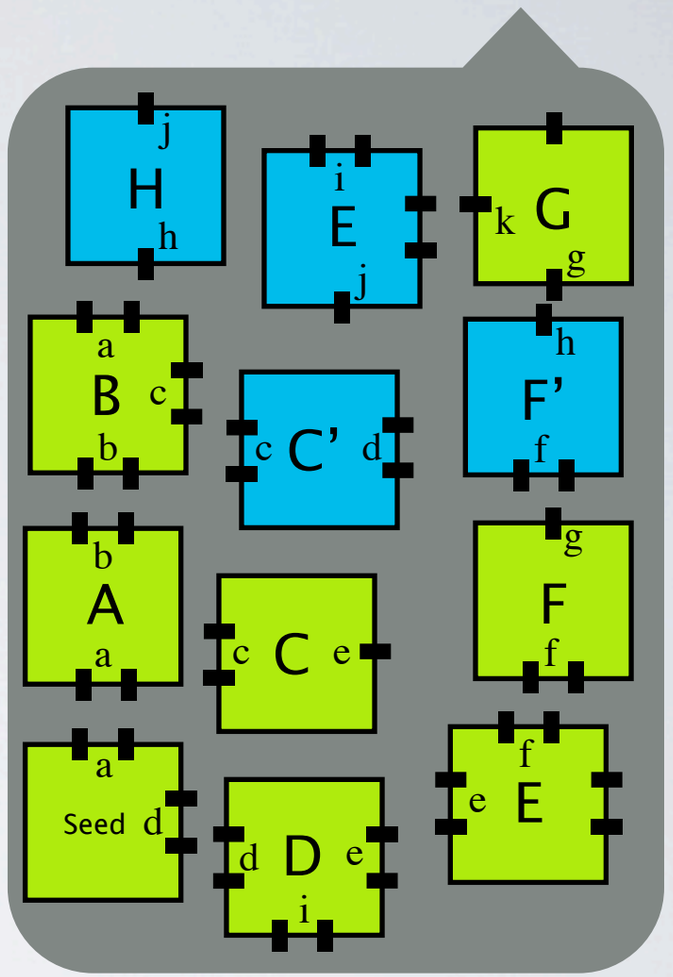

Temperature = 2

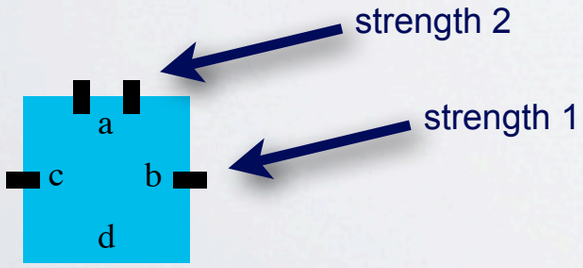

- Finite set of unit-sized square **tiles**
  - non-rotatable, unlimited supply of each tile type
- Each side has a **glue** (a,b,c,d,...)
- Each glue has a **strength** (0,1,2,3,...)
- **Tile assembly system:** is a [**tile set**, **seed tile**, **temperature** (0,1,2,3,...)]
- Growth begins from the **seed** tile at (0,0) in Z^2
- A tile **sticks** to an assembly if enough of its glues match so that the sum of the strengths of the matching glues is at least the **temperature**

Abstract tile assembly model

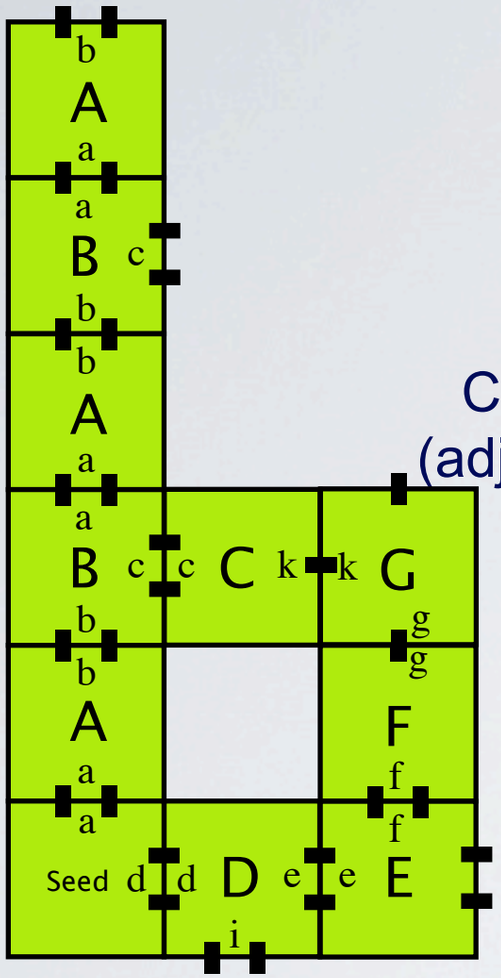

Cooperation
(adjacent sides)

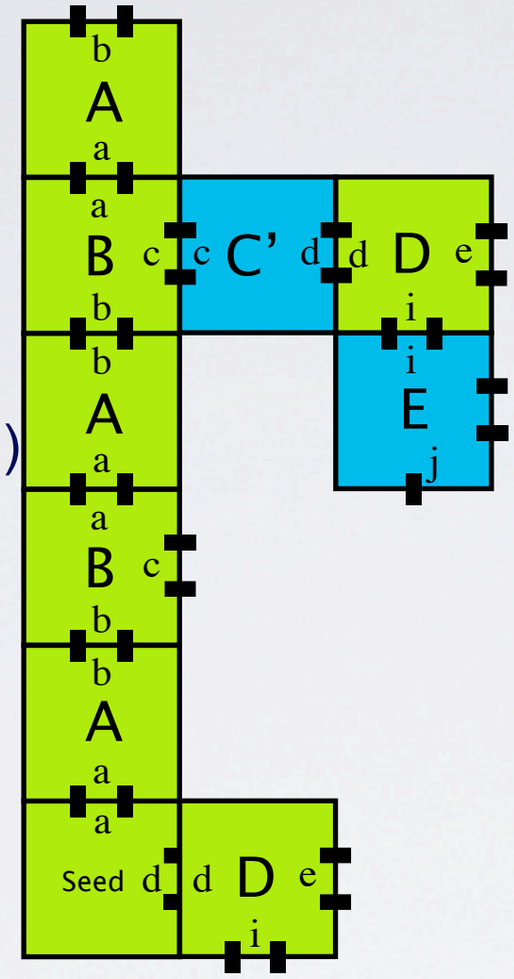

Tile assembly system:
tile set, seed tile, temperature

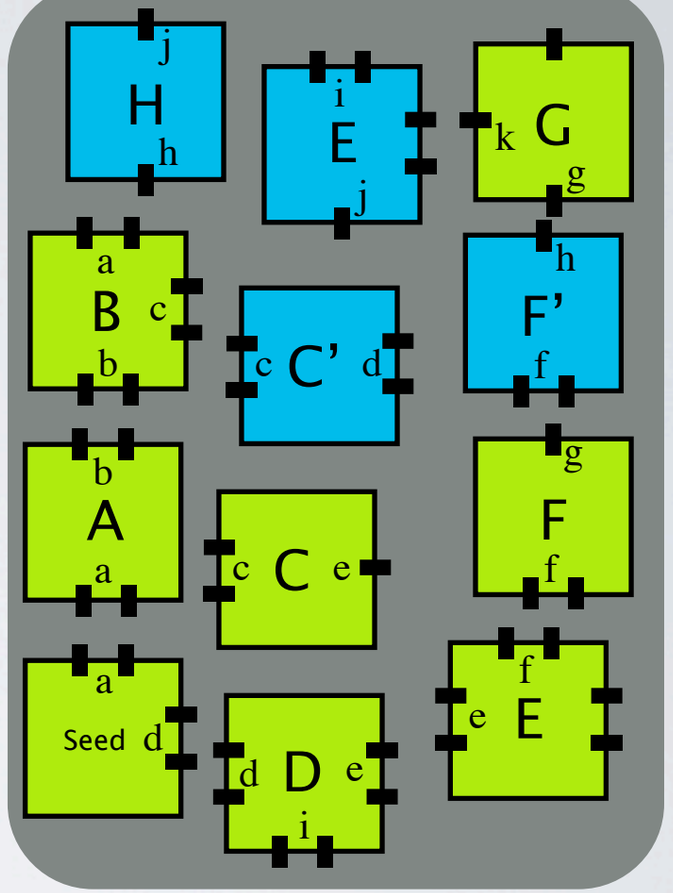

Temperature = 2

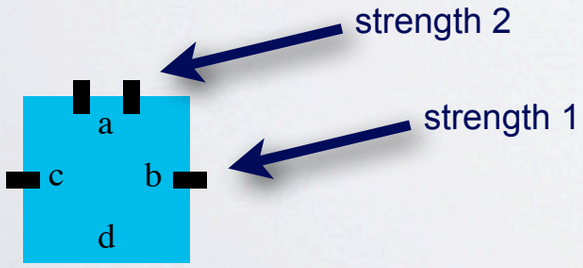

- Finite set of unit-sized square **tiles**
  - non-rotatable, unlimited supply of each tile type
- Each side has a **glue** (a,b,c,d,...)
- Each glue has a **strength** (0,1,2,3,...)
- **Tile assembly system:** is a [**tile set**, **seed tile**, **temperature** (0,1,2,3,...)]
- Growth begins from the **seed** tile at (0,0) in Z^2
- A tile **sticks** to an assembly if enough of its glues match so that the sum of the strengths of the matching glues is at least the **temperature**

Abstract tile assembly model

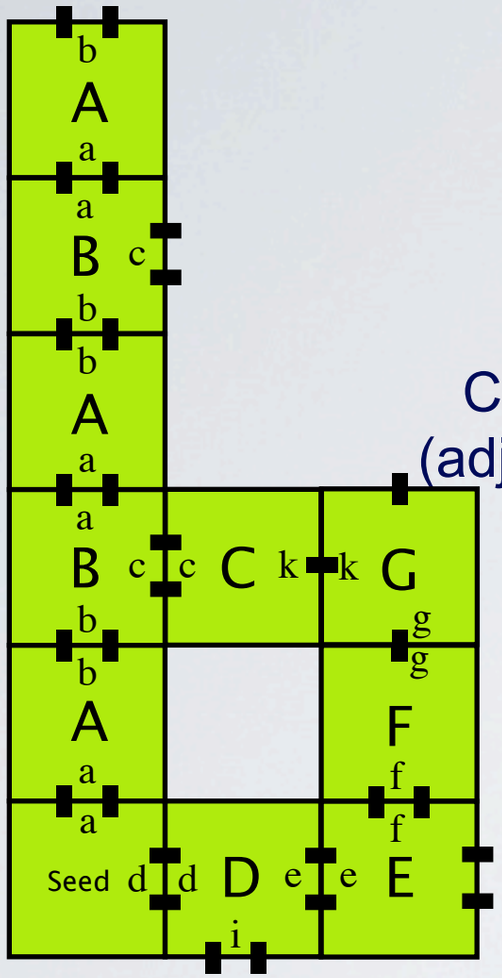

Cooperation
(adjacent sides)

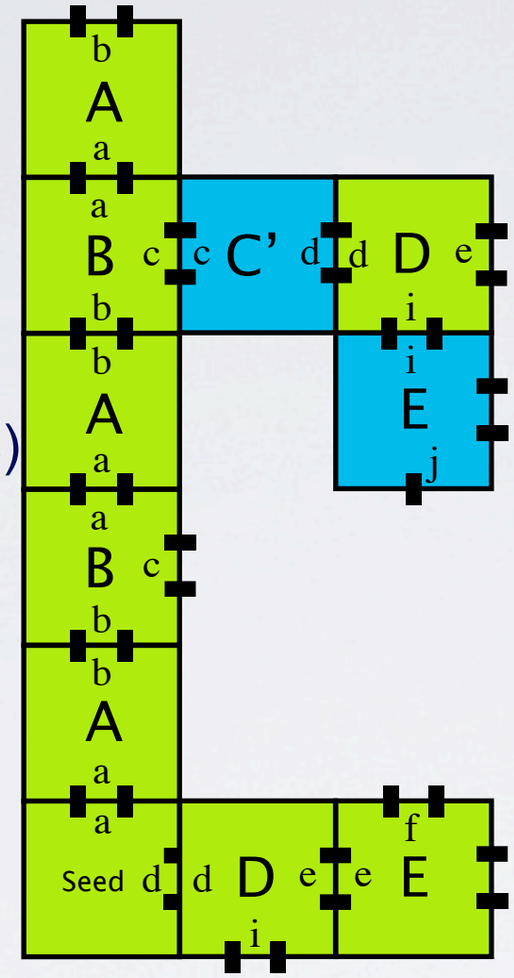

Tile assembly system:
tile set, seed tile, temperature

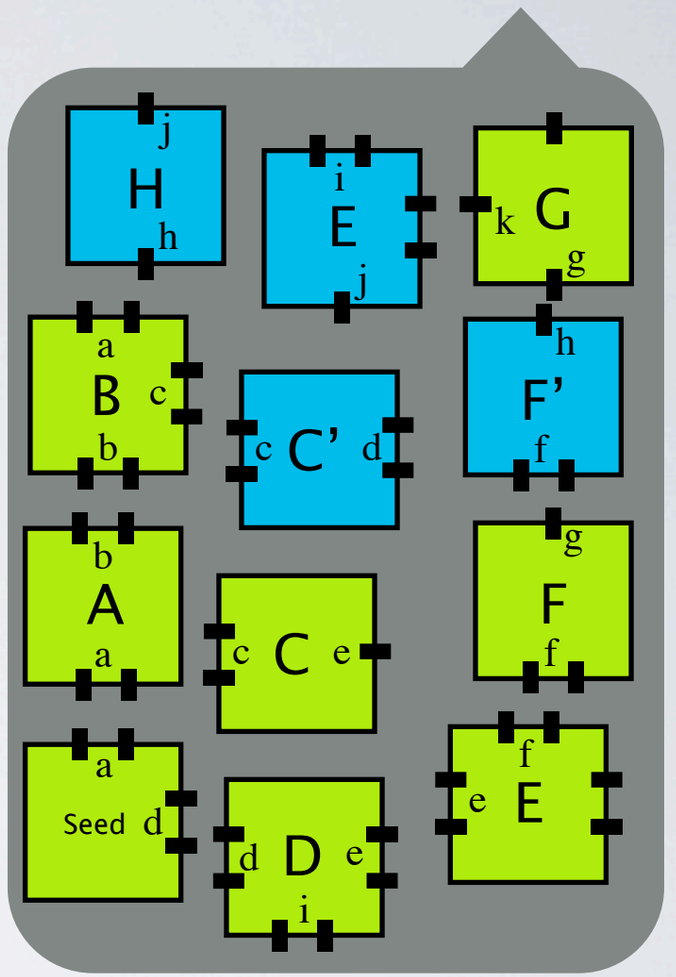

Temperature = 2

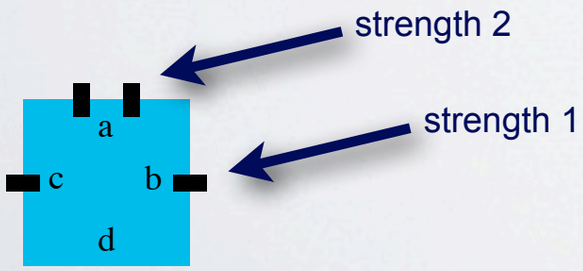

- Finite set of unit-sized square **tiles**
  - non-rotatable, unlimited supply of each tile type
- Each side has a **glue** (a,b,c,d,...)
- Each glue has a **strength** (0,1,2,3,...)
- **Tile assembly system:** is a [**tile set**, **seed tile**, **temperature** (0,1,2,3,...)]
- Growth begins from the **seed** tile at (0,0) in Z^2
- A tile **sticks** to an assembly if enough of its glues match so that the sum of the strengths of the matching glues is at least the **temperature**

Abstract tile assembly model

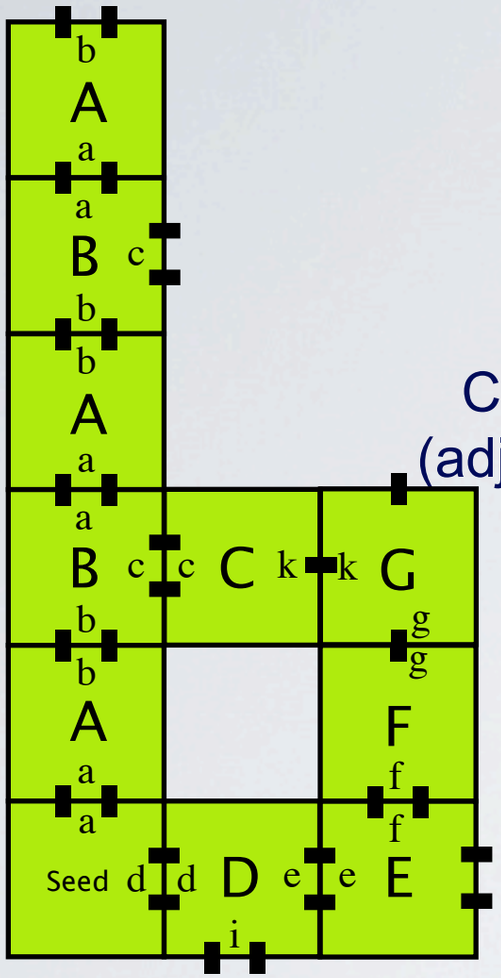

Cooperation
(adjacent sides)

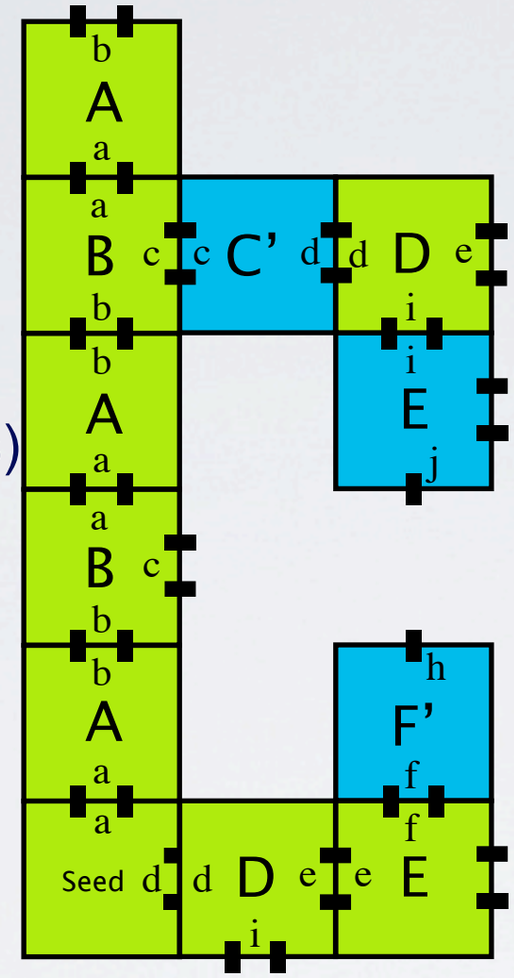

Tile assembly system:
tile set, seed tile, temperature

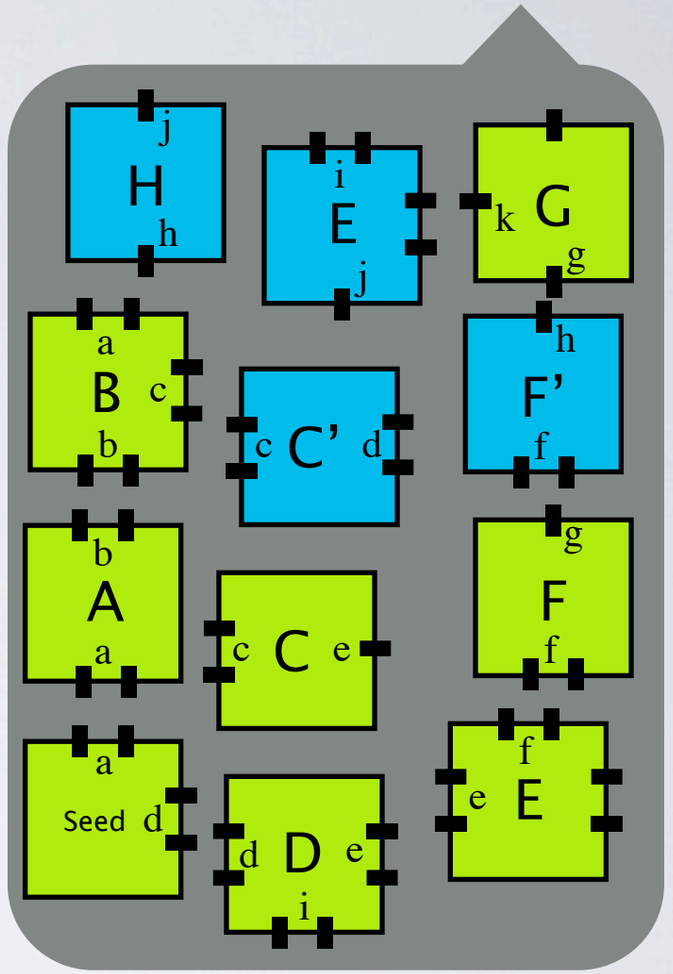

Temperature = 2

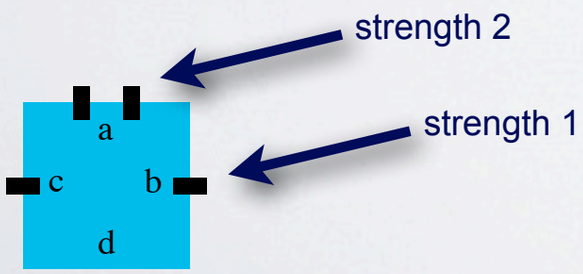

- Finite set of unit-sized square **tiles**
  - non-rotatable, unlimited supply of each tile type
- Each side has a **glue** (a,b,c,d,...)
- Each glue has a **strength** (0,1,2,3,...)
- **Tile assembly system:** is a [**tile set**, **seed tile**, **temperature** (0,1,2,3,...)]
- Growth begins from the **seed** tile at (0,0) in Z^2
- A tile **sticks** to an assembly if enough of its glues match so that the sum of the strengths of the matching glues is at least the **temperature**

Abstract tile assembly model

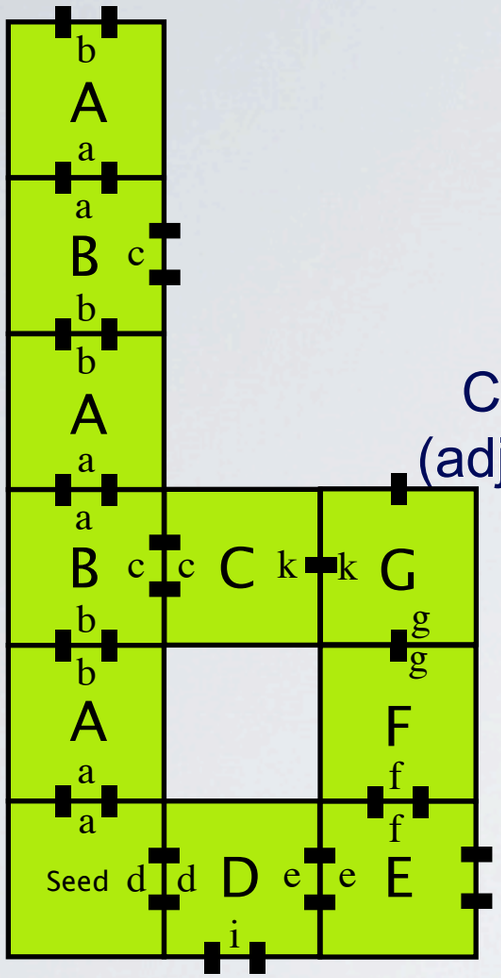

Cooperation
(adjacent sides)

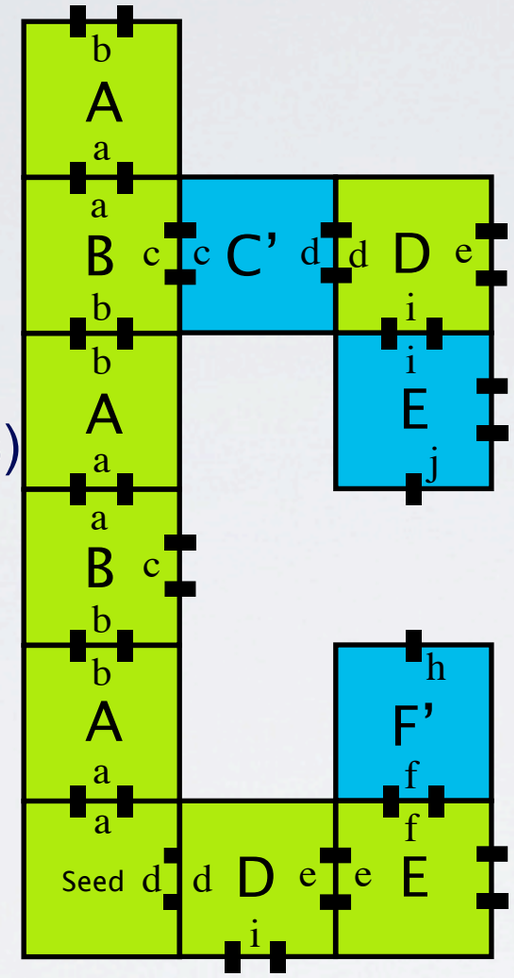

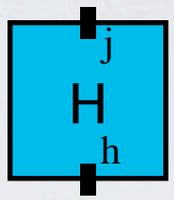

Tile assembly system:
tile set, seed tile, temperature

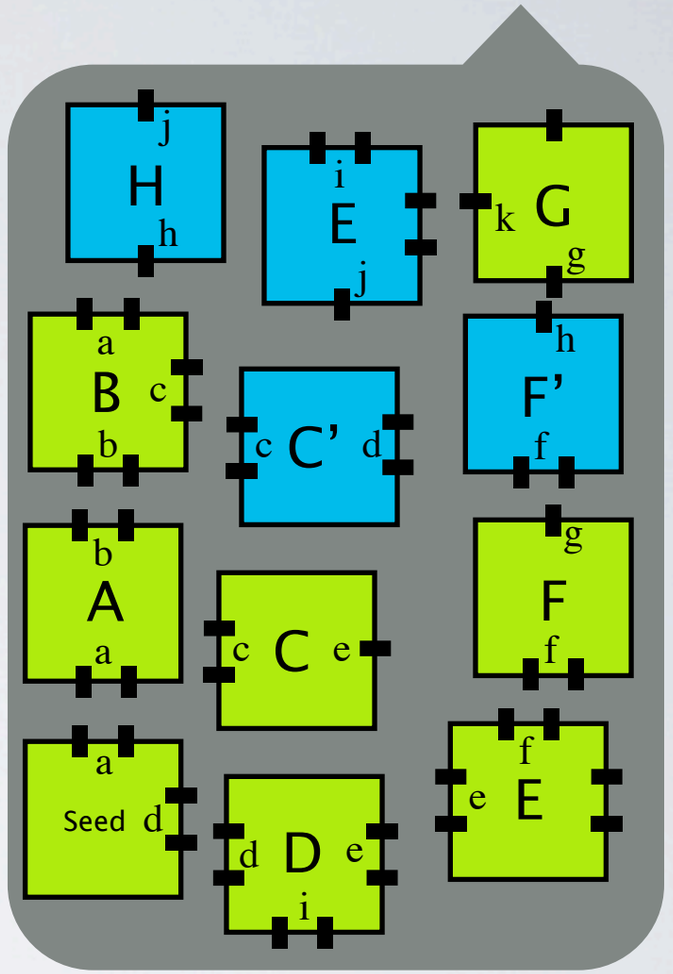

Temperature = 2

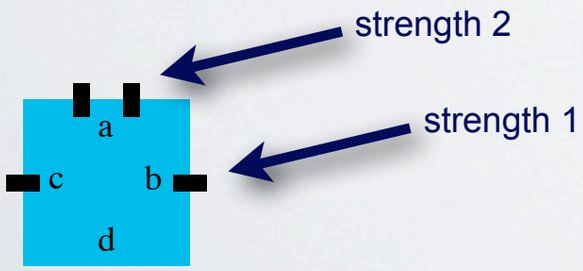

- Finite set of unit-sized square **tiles**
  - non-rotatable, unlimited supply of each tile type
- Each side has a **glue** (a,b,c,d,...)
- Each glue has a **strength** (0,1,2,3,...)
- **Tile assembly system:** is a [**tile set**, **seed tile**, **temperature** (0,1,2,3,...)]
- Growth begins from the **seed** tile at (0,0) in Z^2
- A tile **sticks** to an assembly if enough of its glues match so that the sum of the strengths of the matching glues is at least the **temperature**

Abstract tile assembly model

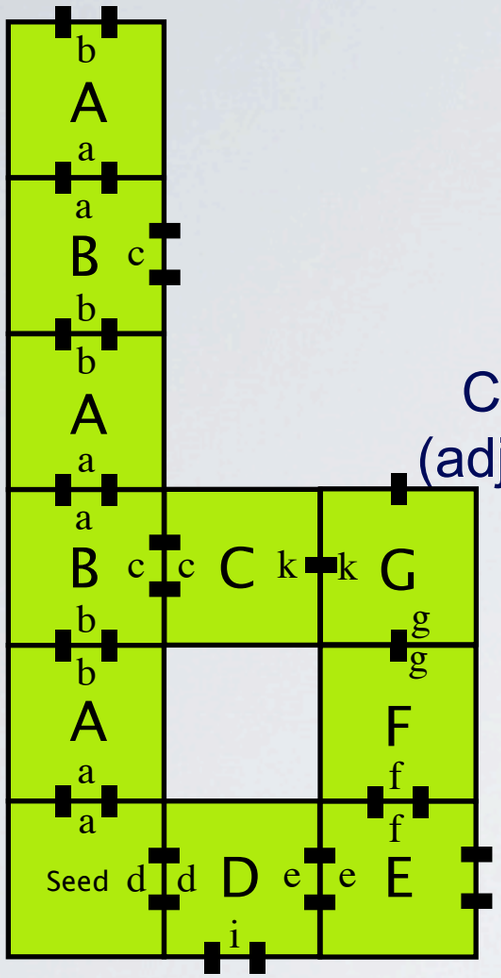

Cooperation
(adjacent sides)

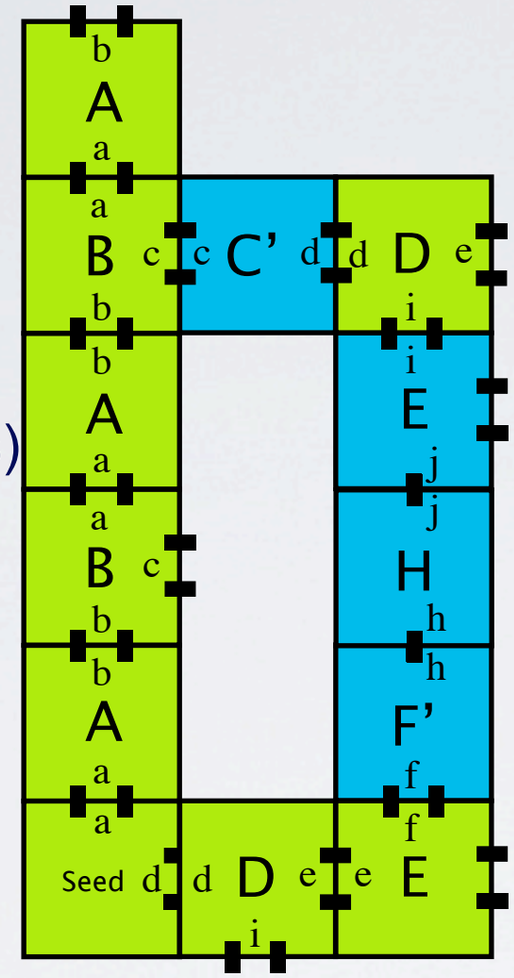

Tile assembly system:
tile set, seed tile, temperature

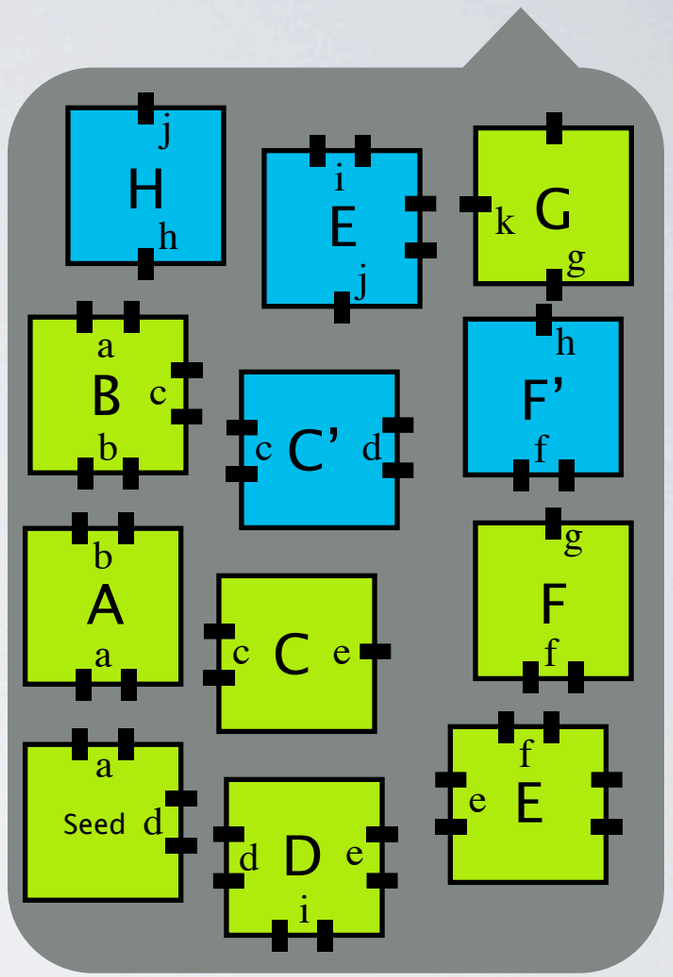

Temperature = 2

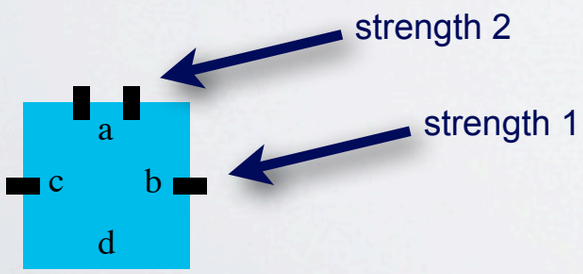

- Finite set of unit-sized square **tiles**
  - non-rotatable, unlimited supply of each tile type
- Each side has a **glue** (a,b,c,d,...)
- Each glue has a **strength** (0,1,2,3,...)
- **Tile assembly system:** is a [**tile set**, **seed tile**, **temperature** (0,1,2,3,...)]
- Growth begins from the **seed** tile at (0,0) in Z^2
- A tile **sticks** to an assembly if enough of its glues match so that the sum of the strengths of the matching glues is at least the **temperature**

Abstract tile assembly model

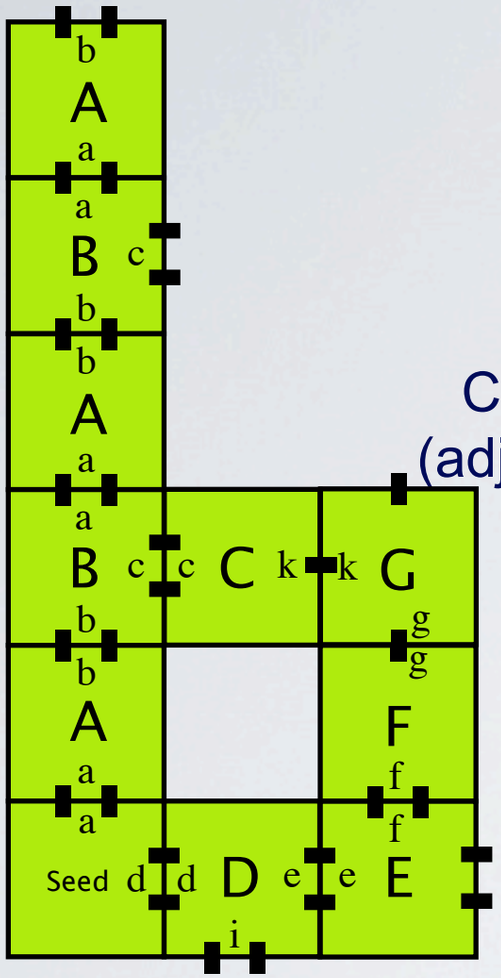

Cooperation
(adjacent sides)

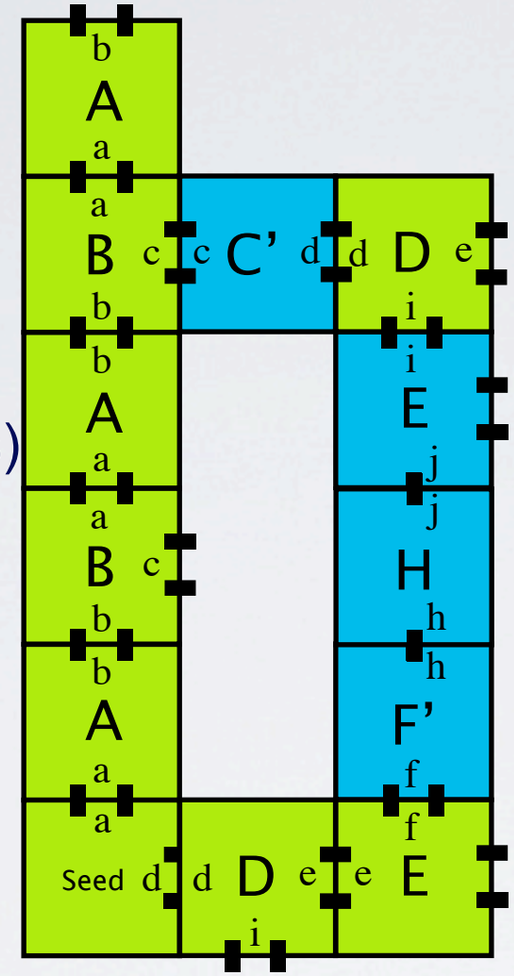

Cooperation
(opposite sides)

Tile assembly system:
tile set, seed tile, temperature

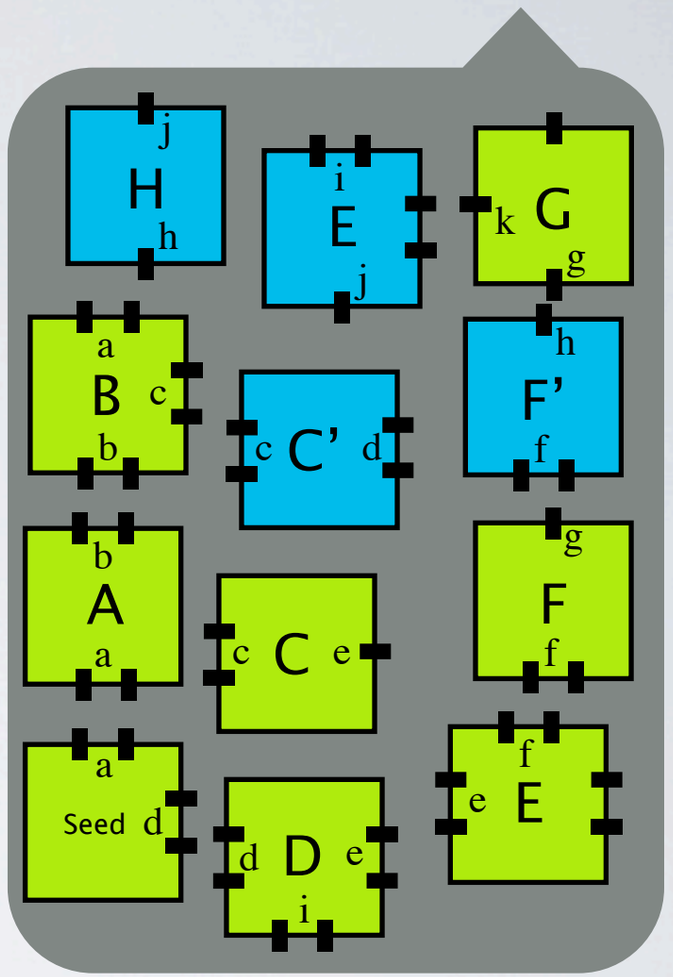

Temperature = 2

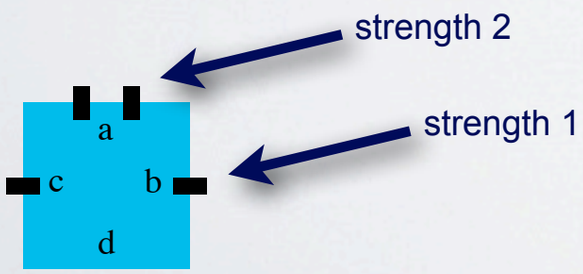

- Finite set of unit-sized square **tiles**
  - non-rotatable, unlimited supply of each tile type
- Each side has a **glue** (a,b,c,d,...)
- Each glue has a **strength** (0,1,2,3,...)
- **Tile assembly system:** is a [**tile set**, **seed tile**, **temperature** (0,1,2,3,...)]
- Growth begins from the **seed** tile at (0,0) in Z^2
- A tile **sticks** to an assembly if enough of its glues match so that the sum of the strengths of the matching glues is at least the **temperature**

Abstract tile assembly model

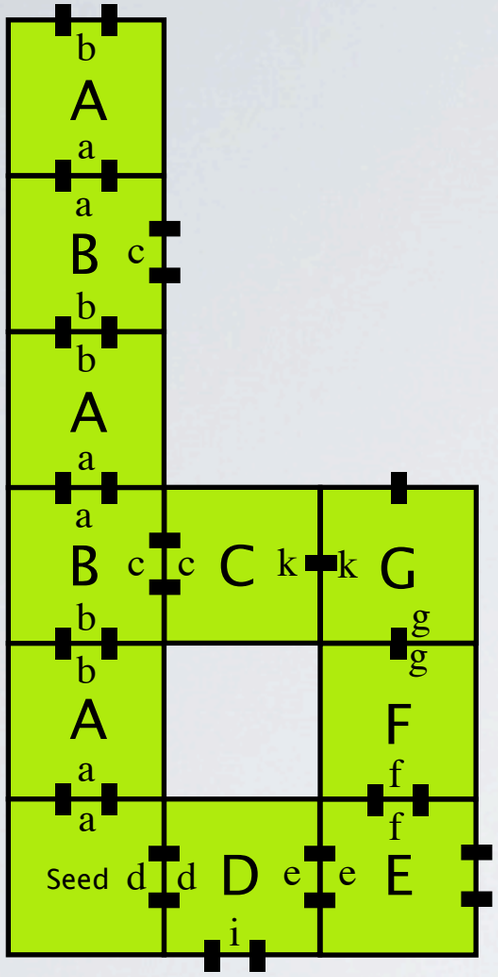

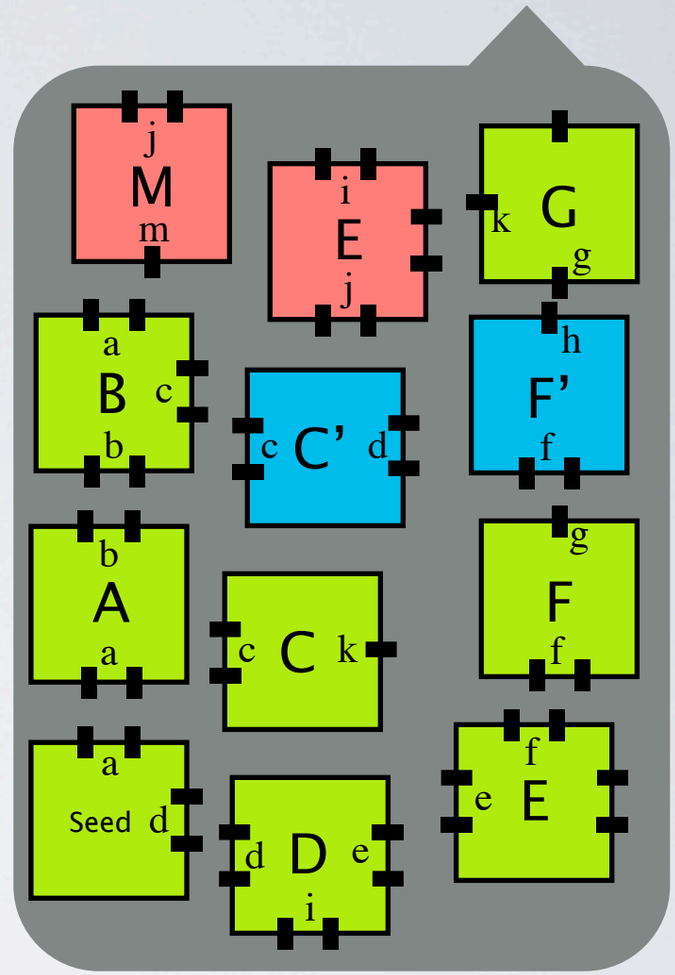

Temperature = 2

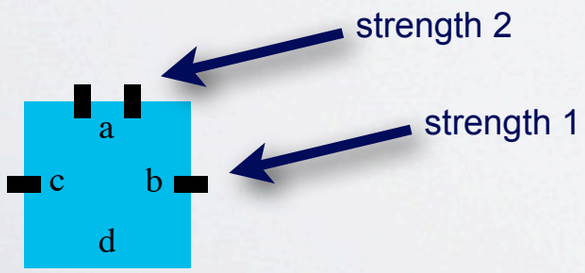

- Square units called **tiles** (non-rotatable)
- Each side has a **glue** (a,b,c,d,...)
- Each glue has a **strength** (0,1,2,3,...)
- Growth begins from a **seed** tile
- Tiles **stick** to the growing assembly if their glues match, and are strong enough (**sum of strengths** is at least the **temperature**)
- **Finite** set of tile types, unlimited supply of each tile type

Defn. Tile assembly system: tile set, seed tile, temperature

Winfree, 1998

Abstract tile assembly model

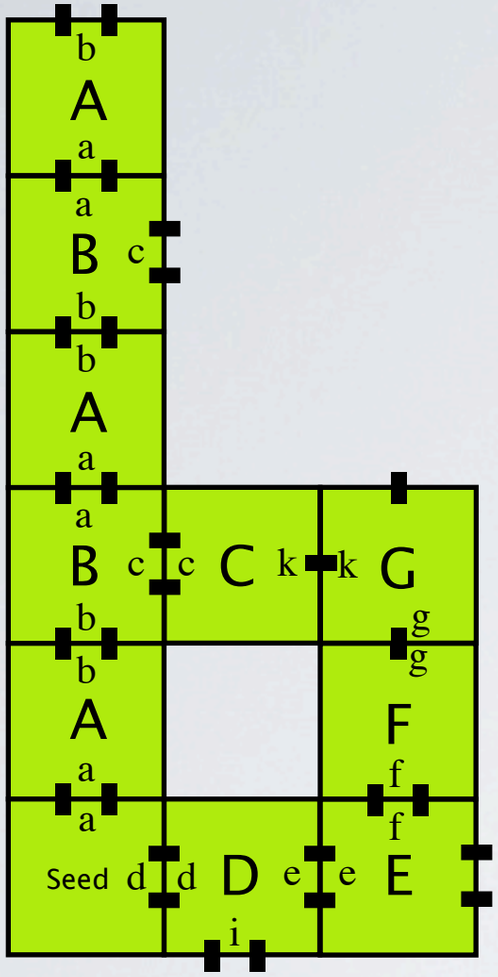

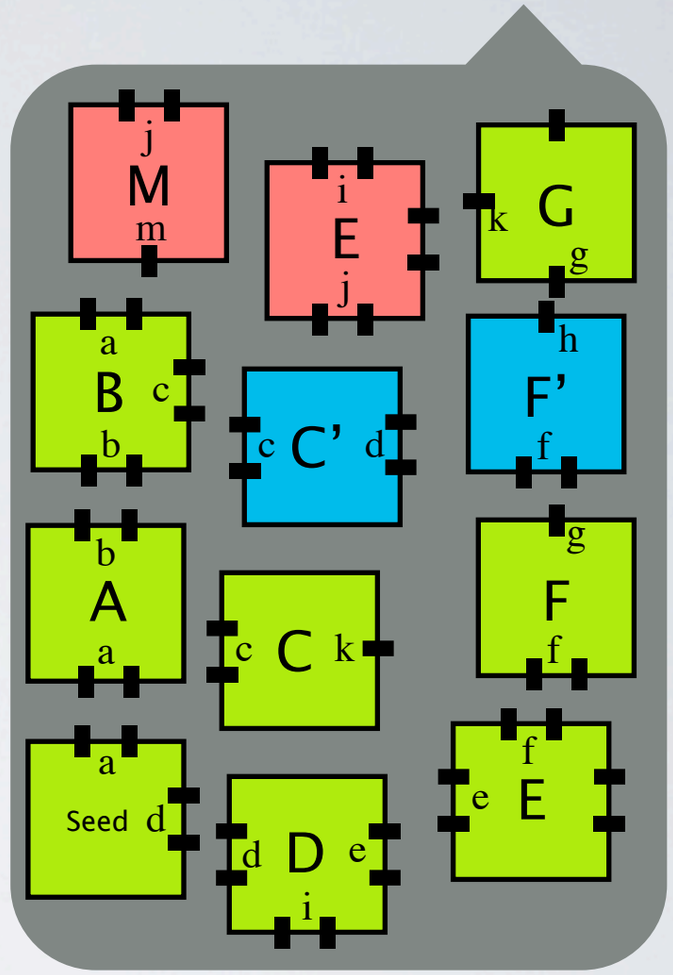

Temperature = 2

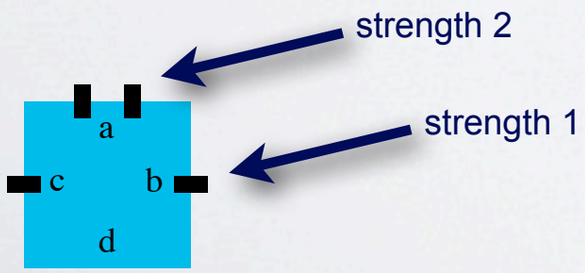

- Square units called **tiles** (non-rotatable)
- Each side has a **glue** (a,b,c,d,...)
- Each glue has a **strength** (0,1,2,3,...)
- Growth begins from a **seed** tile
- Tiles **stick** to the growing assembly if their glues match, and are strong enough (**sum of strengths** is at least the **temperature**)
- **Finite** set of tile types, unlimited supply of each tile type

Defn. Tile assembly system: tile set, seed tile, temperature

Winfree, 1998

Abstract tile assembly model

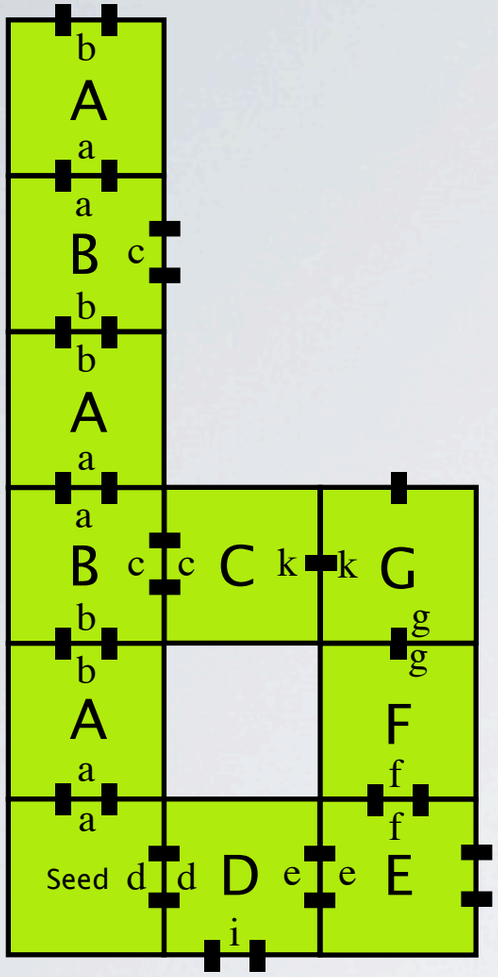

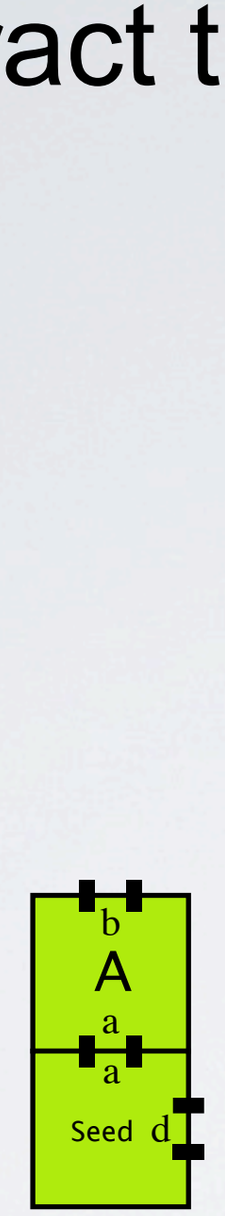

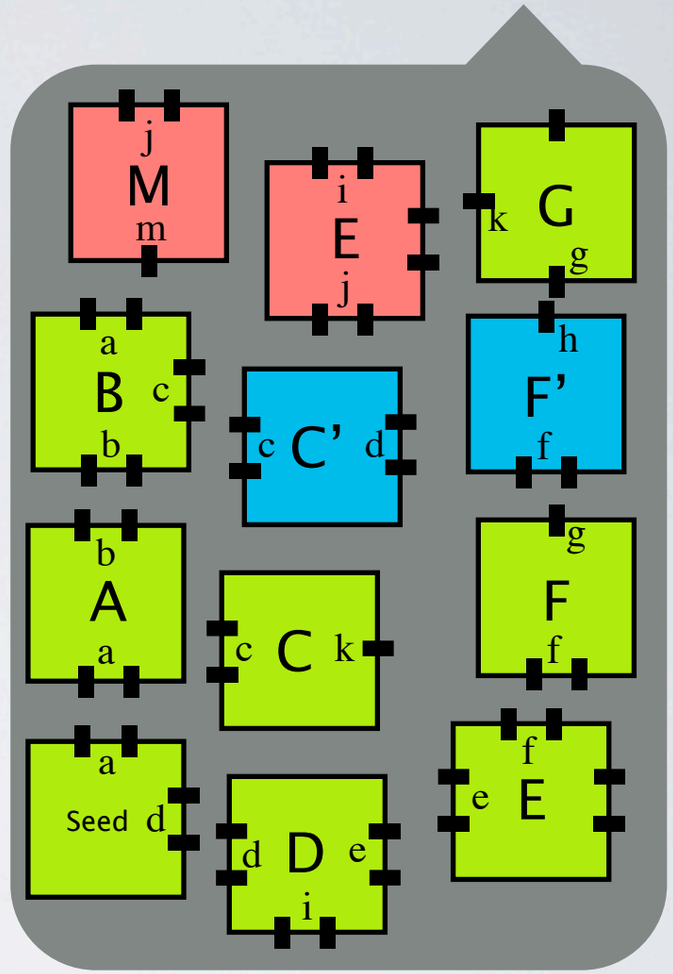

Temperature = 2

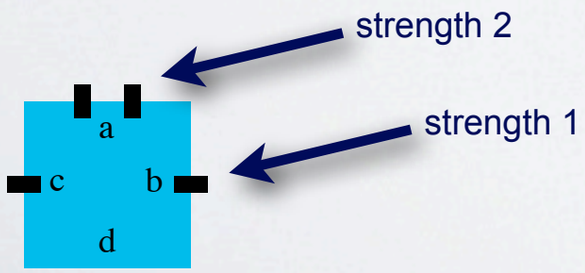

- Square units called **tiles** (non-rotatable)
- Each side has a **glue** (a,b,c,d,...)
- Each glue has a **strength** (0,1,2,3,...)
- Growth begins from a **seed** tile
- Tiles **stick** to the growing assembly if their glues match, and are strong enough (**sum of strengths** is at least the **temperature**)
- **Finite** set of tile types, unlimited supply of each tile type

Defn. Tile assembly system: tile set, seed tile, temperature

Winfree, 1998

Abstract tile assembly model

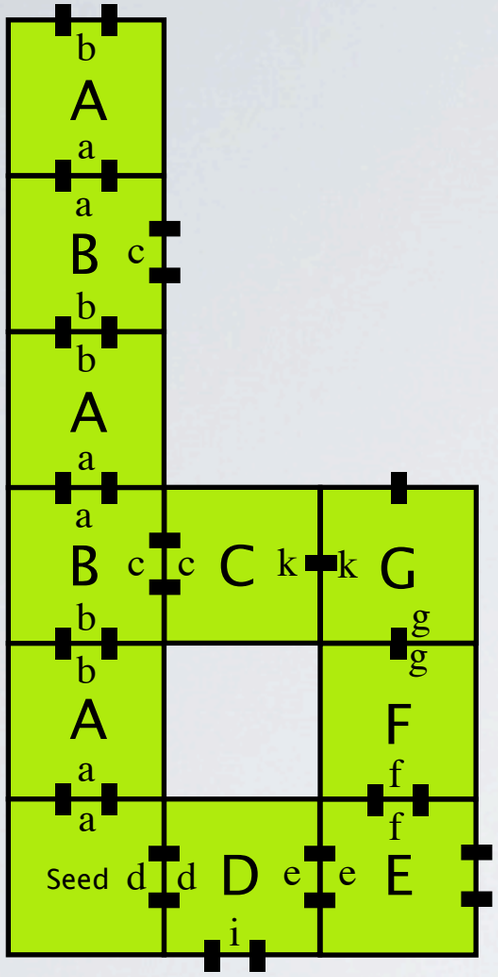

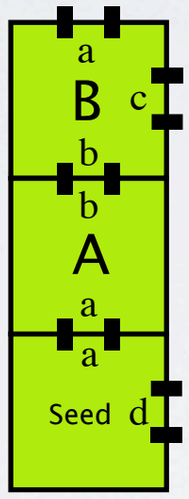

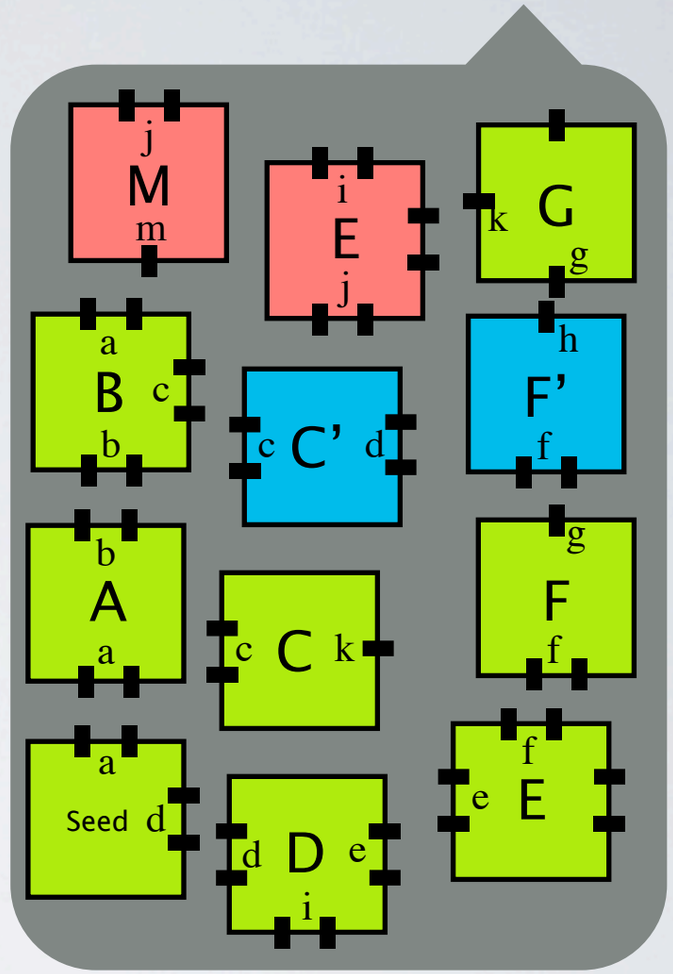

Temperature = 2

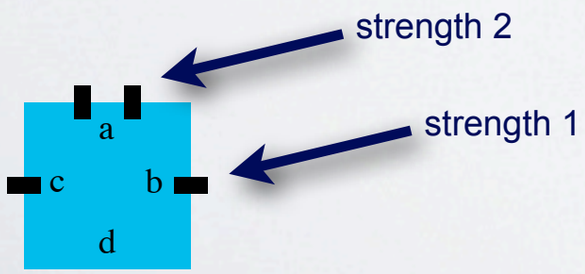

- Square units called **tiles** (non-rotatable)
- Each side has a **glue** (a,b,c,d,...)
- Each glue has a **strength** (0,1,2,3,...)
- Growth begins from a **seed** tile
- Tiles **stick** to the growing assembly if their glues match, and are strong enough (**sum of strengths** is at least the **temperature**)
- **Finite** set of tile types, unlimited supply of each tile type

Defn. Tile assembly system: tile set, seed tile, temperature

Winfree, 1998

Abstract tile assembly model

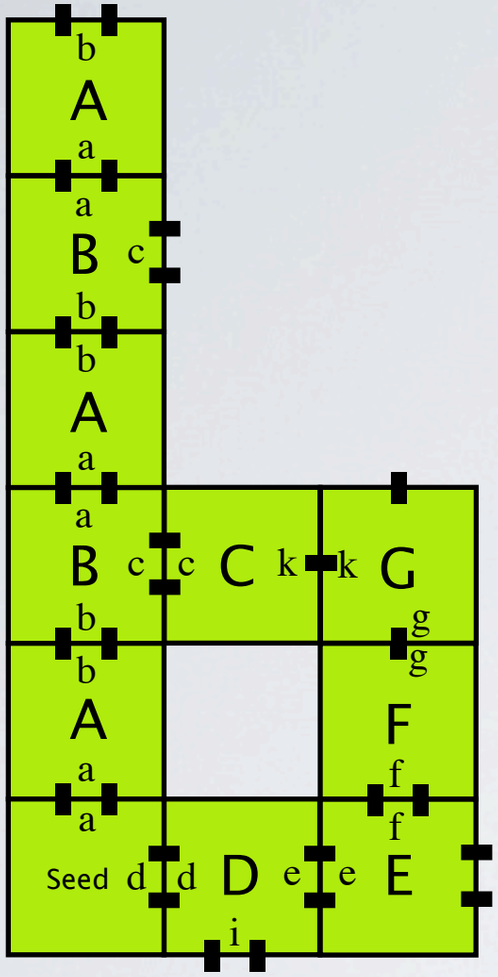

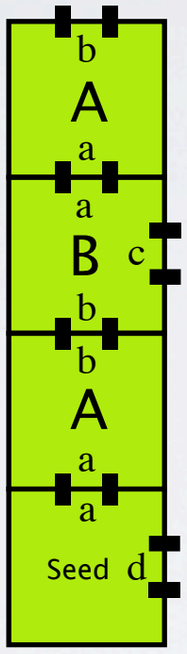

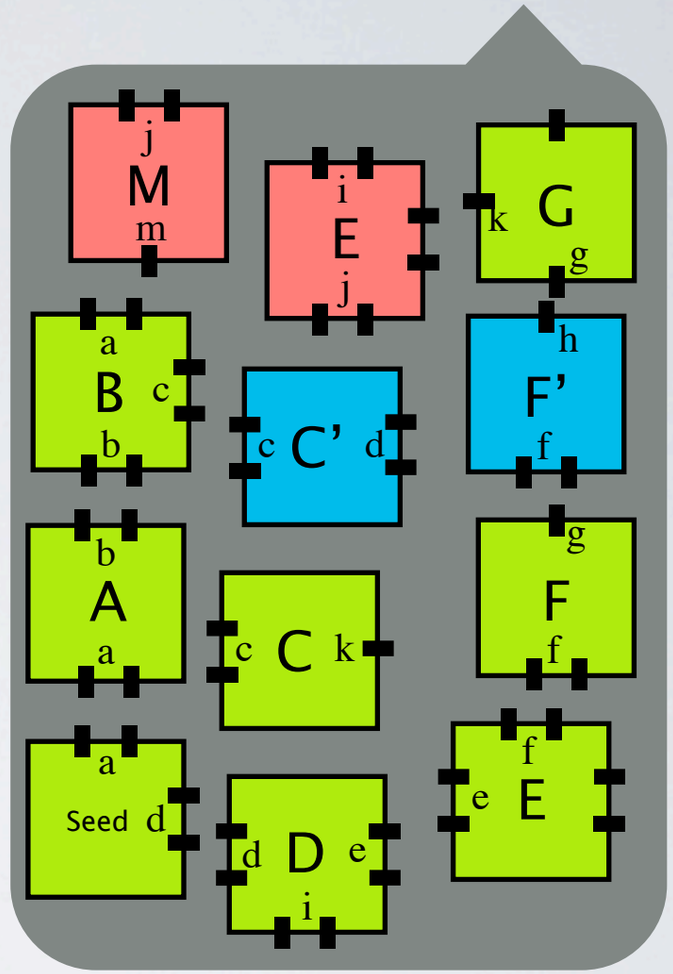

Temperature = 2

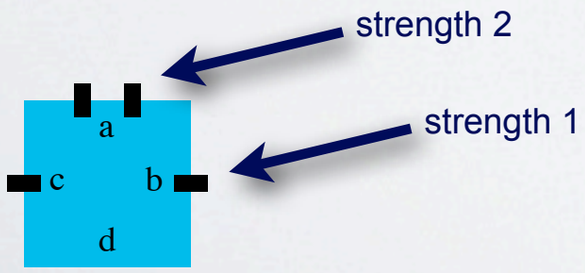

- Square units called **tiles** (non-rotatable)
- Each side has a **glue** (a,b,c,d,...)
- Each glue has a **strength** (0,1,2,3,...)
- Growth begins from a **seed** tile
- Tiles **stick** to the growing assembly if their glues match, and are strong enough (**sum of strengths** is at least the **temperature**)
- **Finite** set of tile types, unlimited supply of each tile type

Defn. Tile assembly system: tile set, seed tile, temperature

Winfree, 1998

Abstract tile assembly model

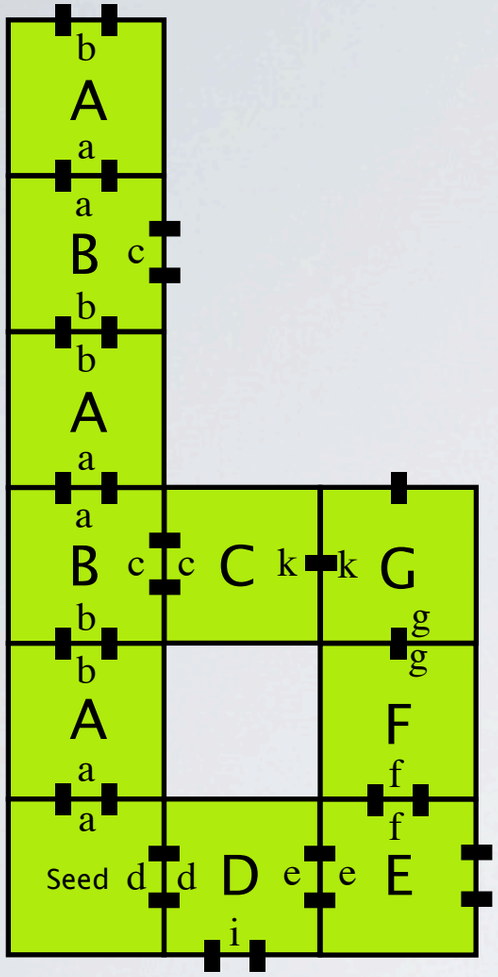

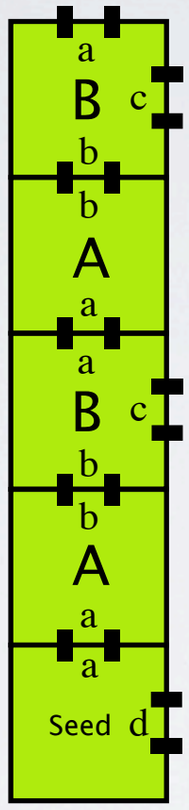

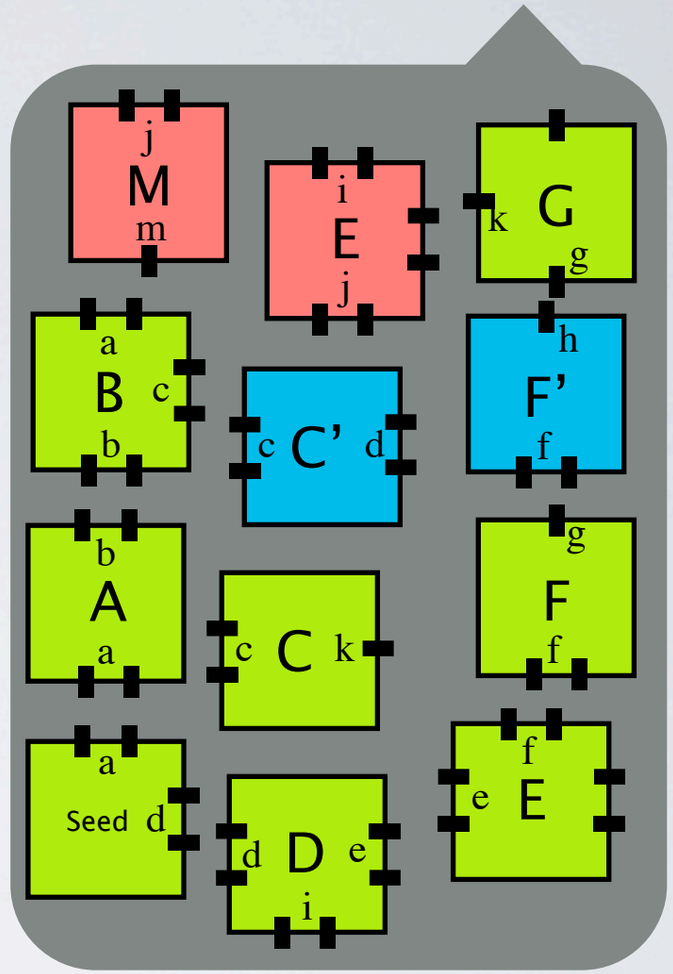

Temperature = 2

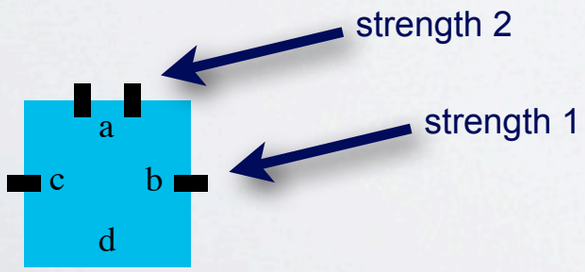

- Square units called **tiles** (non-rotatable)
- Each side has a **glue** (a,b,c,d,...)
- Each glue has a **strength** (0,1,2,3,...)
- Growth begins from a **seed** tile
- Tiles **stick** to the growing assembly if their glues match, and are strong enough (**sum of strengths** is at least the **temperature**)
- **Finite** set of tile types, unlimited supply of each tile type

Defn. Tile assembly system: tile set, seed tile, temperature

Winfree, 1998

Abstract tile assembly model

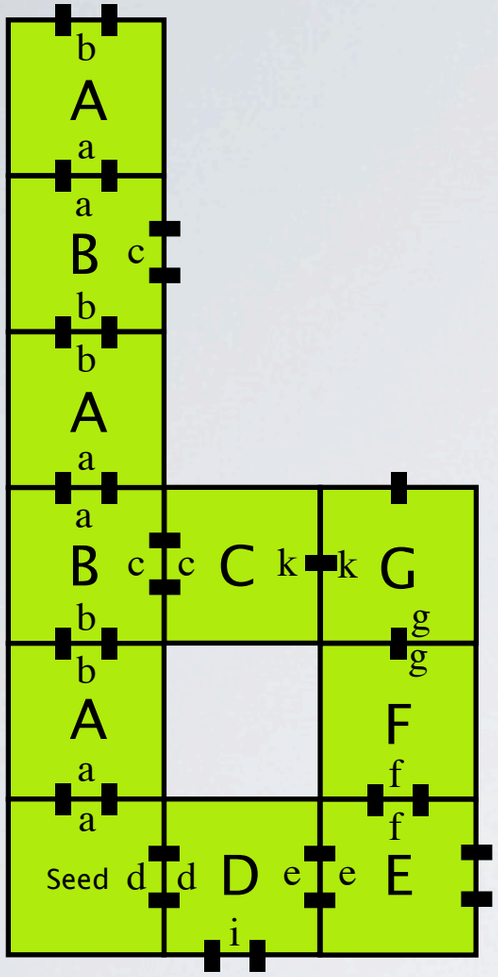

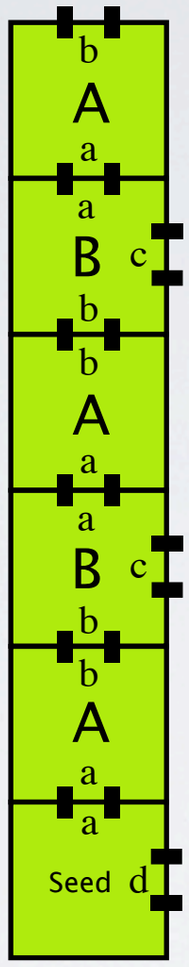

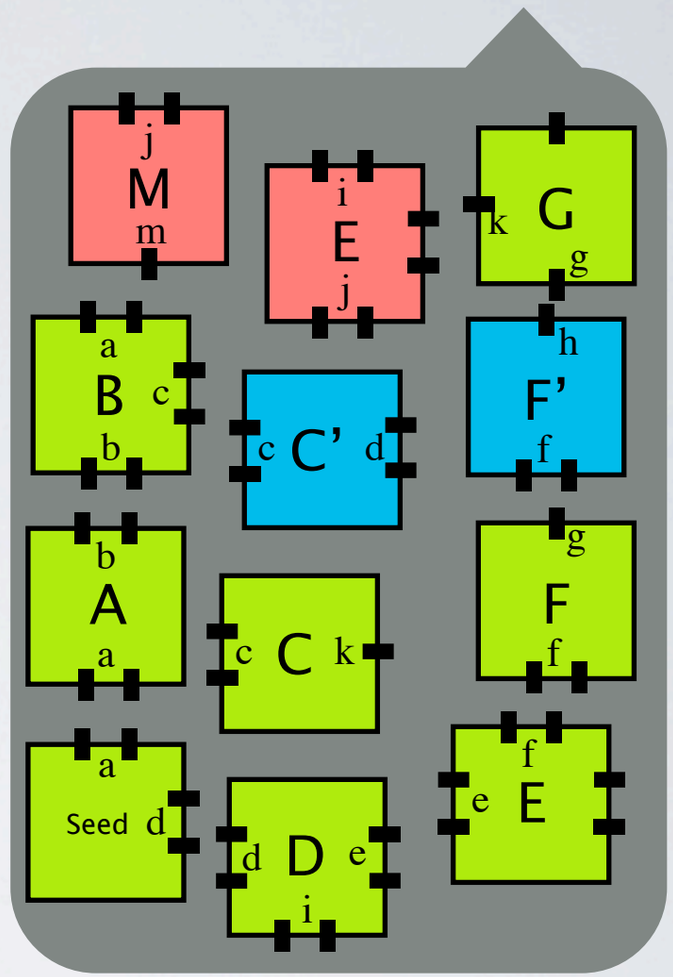

Temperature = 2

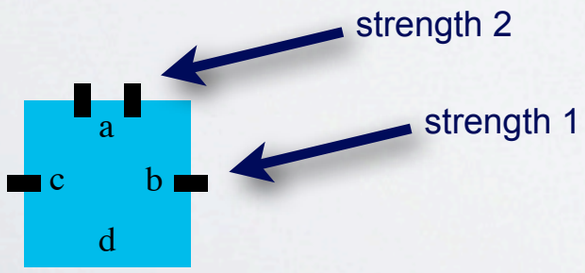

- Square units called **tiles** (non-rotatable)
- Each side has a **glue** (a,b,c,d,...)
- Each glue has a **strength** (0,1,2,3,...)
- Growth begins from a **seed** tile
- Tiles **stick** to the growing assembly if their glues match, and are strong enough (**sum of strengths** is at least the **temperature**)
- **Finite** set of tile types, unlimited supply of each tile type

Defn. Tile assembly system: tile set, seed tile, temperature

Winfree, 1998

Abstract tile assembly model

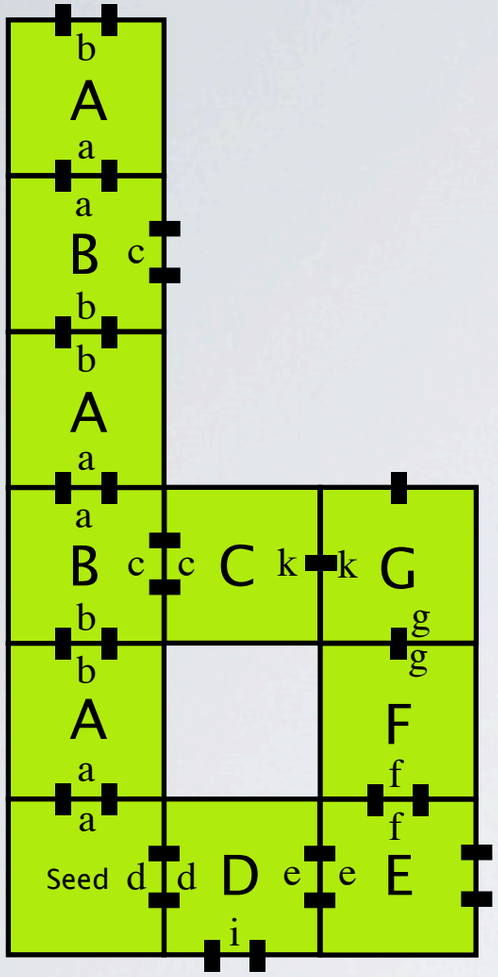

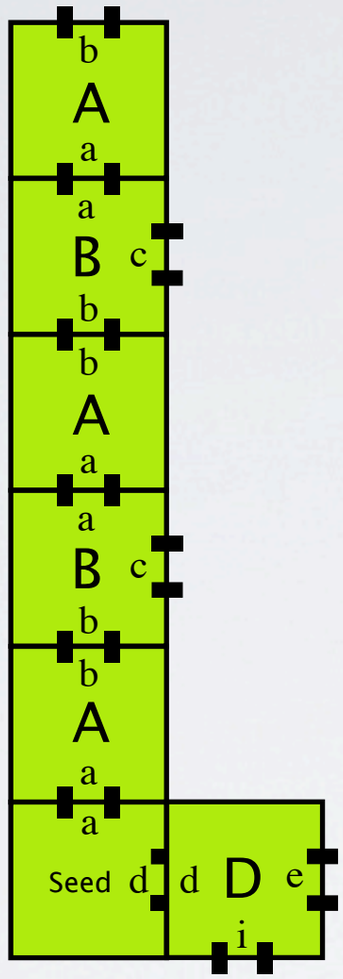

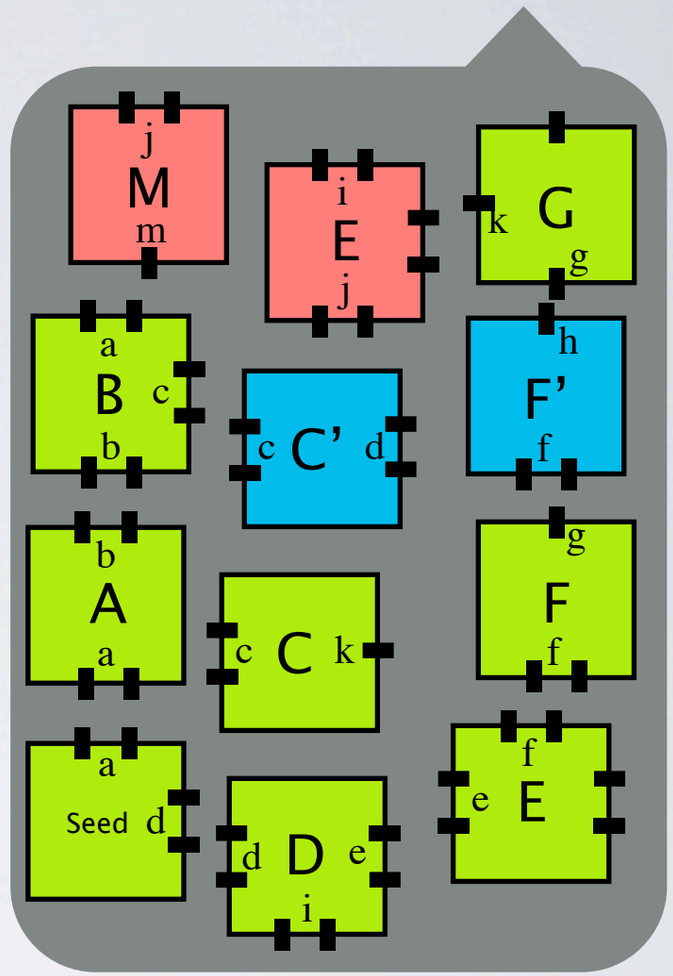

Temperature = 2

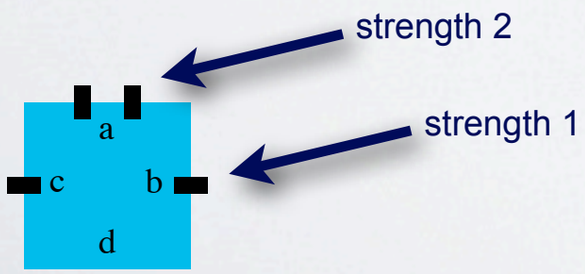

- Square units called **tiles** (non-rotatable)
- Each side has a **glue** (a,b,c,d,...)
- Each glue has a **strength** (0,1,2,3,...)
- Growth begins from a **seed** tile
- Tiles **stick** to the growing assembly if their glues match, and are strong enough (**sum of strengths** is at least the **temperature**)
- **Finite** set of tile types, unlimited supply of each tile type

Defn. Tile assembly system: tile set, seed tile, temperature

Winfree, 1998

Abstract tile assembly model

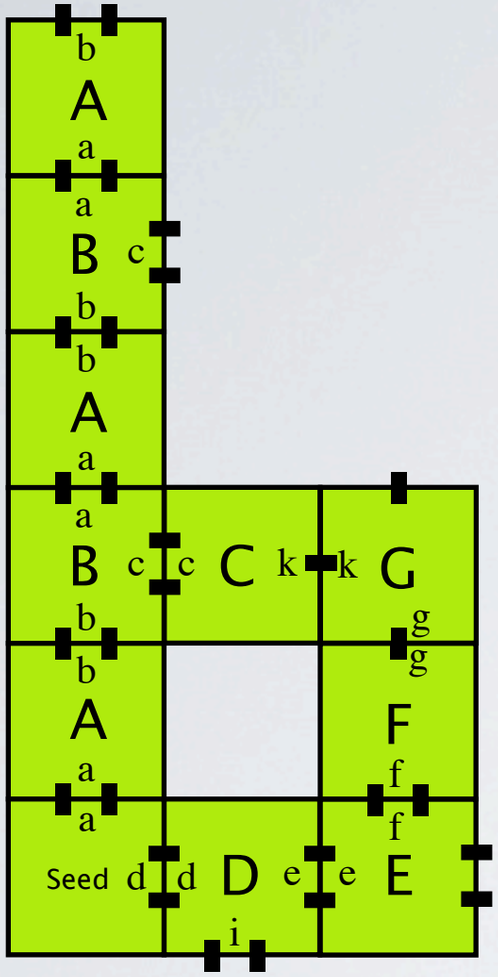

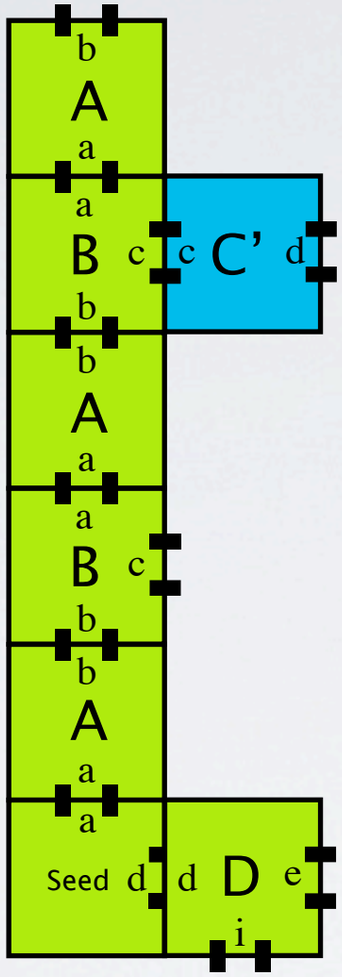

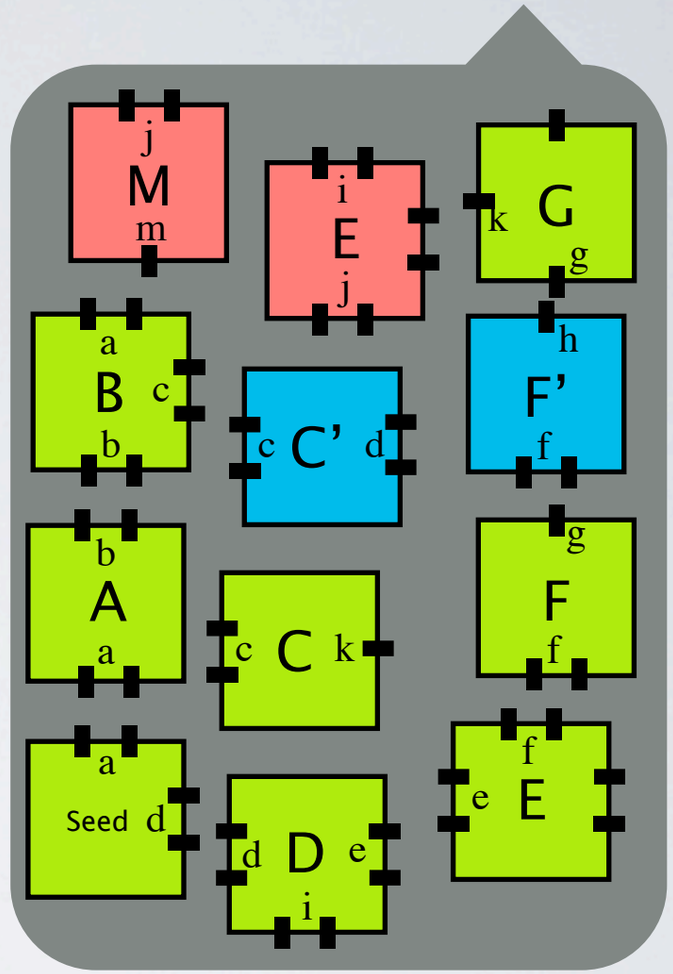

Temperature = 2

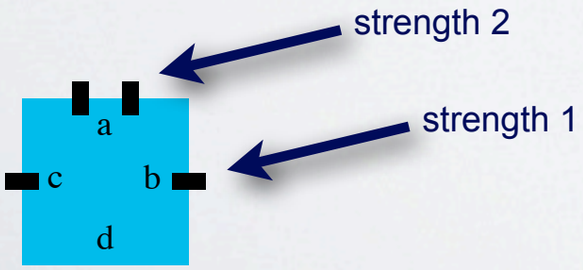

- Square units called **tiles** (non-rotatable)
- Each side has a **glue** (a,b,c,d,...)
- Each glue has a **strength** (0,1,2,3,...)
- Growth begins from a **seed** tile
- Tiles **stick** to the growing assembly if their glues match, and are strong enough (**sum of strengths** is at least the **temperature**)
- **Finite** set of tile types, unlimited supply of each tile type

Defn. Tile assembly system: tile set, seed tile, temperature

Winfree, 1998

Abstract tile assembly model

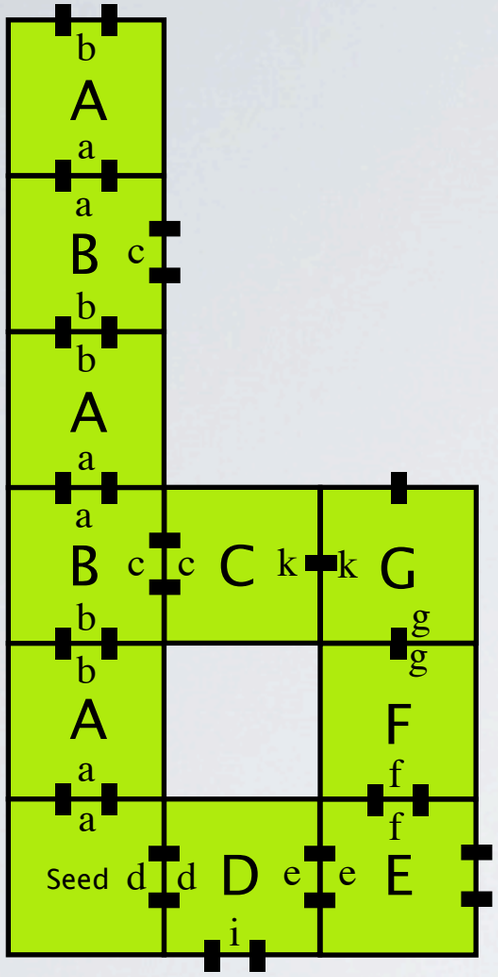

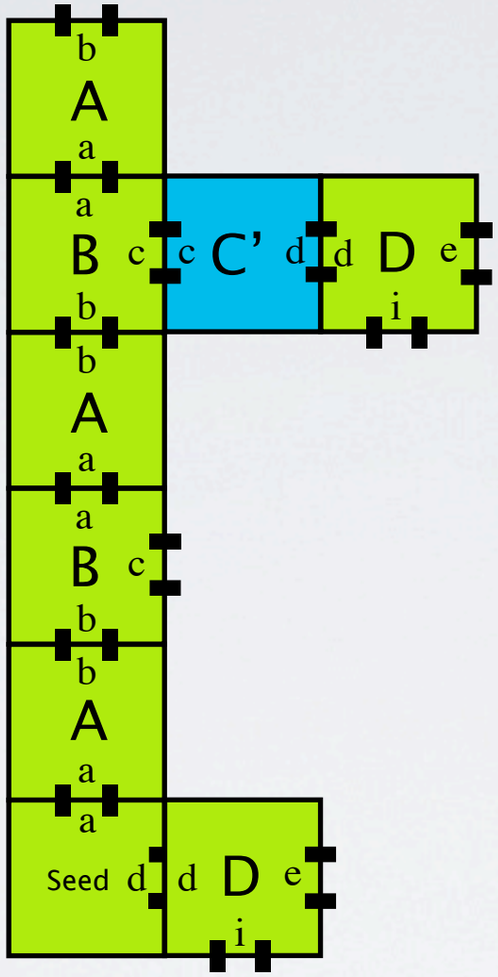

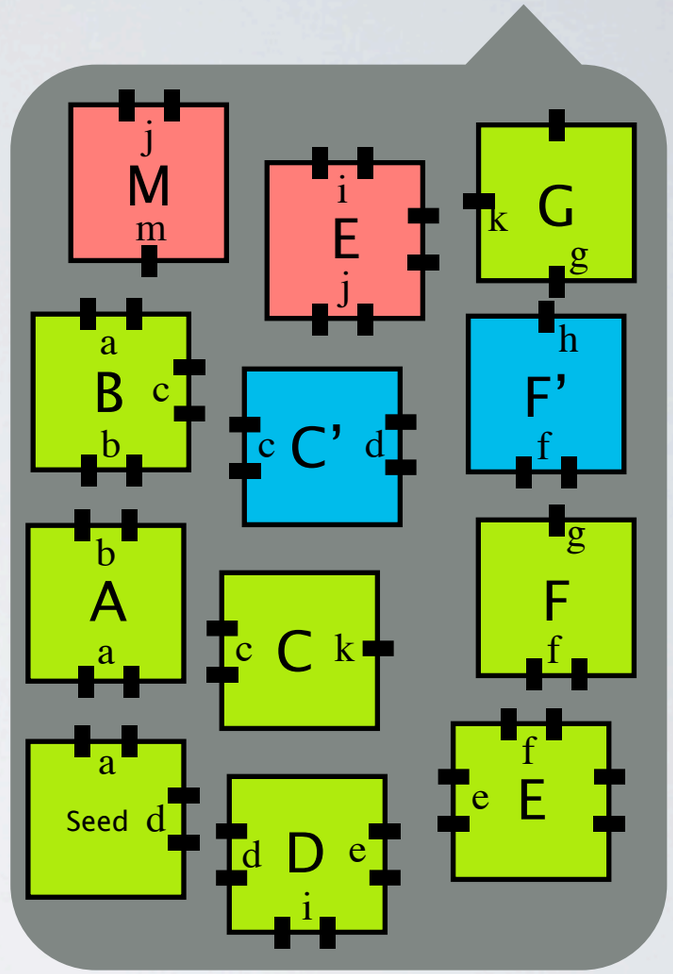

Temperature = 2

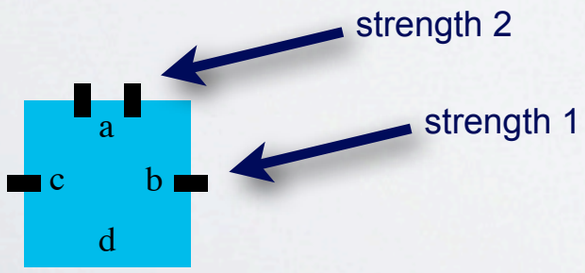

- Square units called **tiles** (non-rotatable)
- Each side has a **glue** (a,b,c,d,...)
- Each glue has a **strength** (0,1,2,3,...)
- Growth begins from a **seed** tile
- Tiles **stick** to the growing assembly if their glues match, and are strong enough (**sum of strengths** is at least the **temperature**)
- **Finite** set of tile types, unlimited supply of each tile type

Defn. Tile assembly system: tile set, seed tile, temperature

Winfree, 1998

Abstract tile assembly model

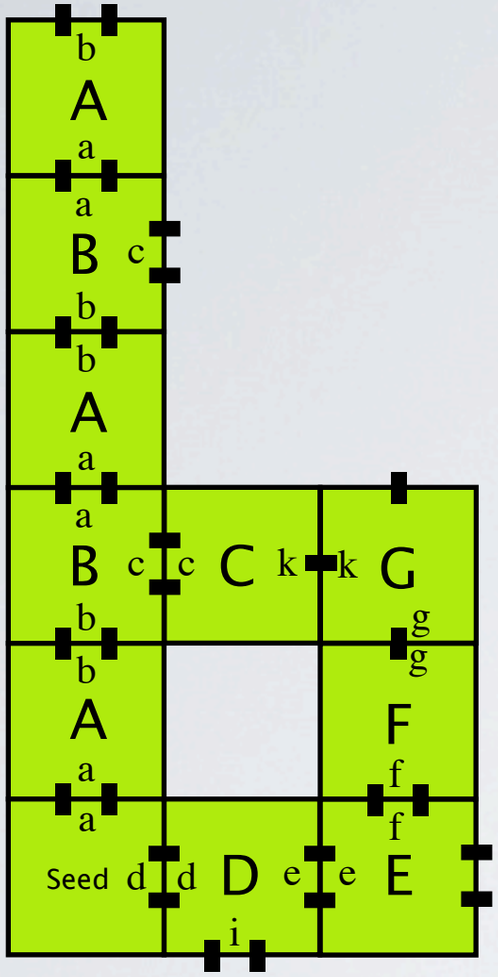

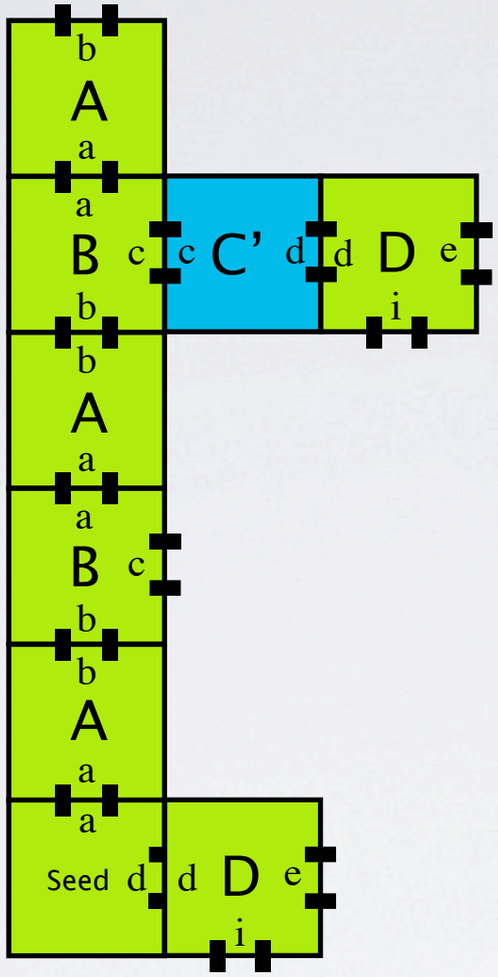

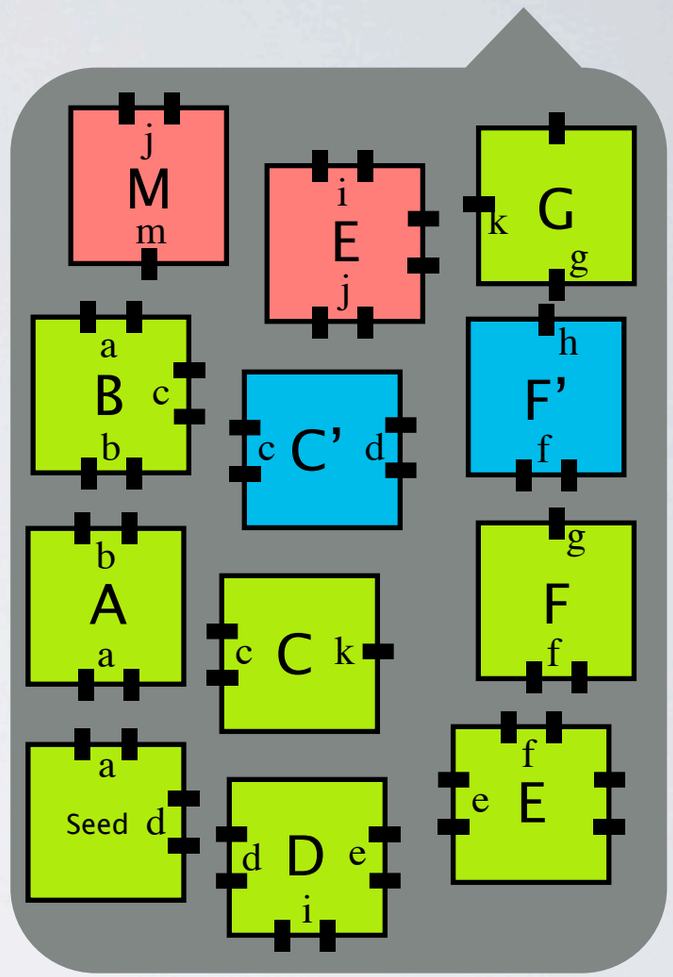

Temperature = 2

Order of tile placement is nondeterminisitc (asynchronous growth).
More than one tile type can go at a given position

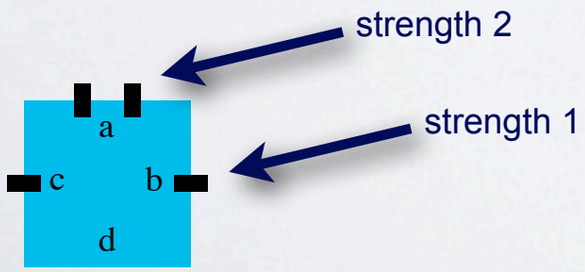

- Square units called **tiles** (non-rotatable)
- Each side has a **glue** (a,b,c,d,...)
- Each glue has a **strength** (0,1,2,3,...)
- Growth begins from a **seed** tile
- Tiles **stick** to the growing assembly if their glues match, and are strong enough (**sum of strengths** is at least the **temperature**)
- **Finite** set of tile types, unlimited supply of each tile type

Defn. Tile assembly system: tile set, seed tile, temperature

Winfree, 1998

Abstract tile assembly model

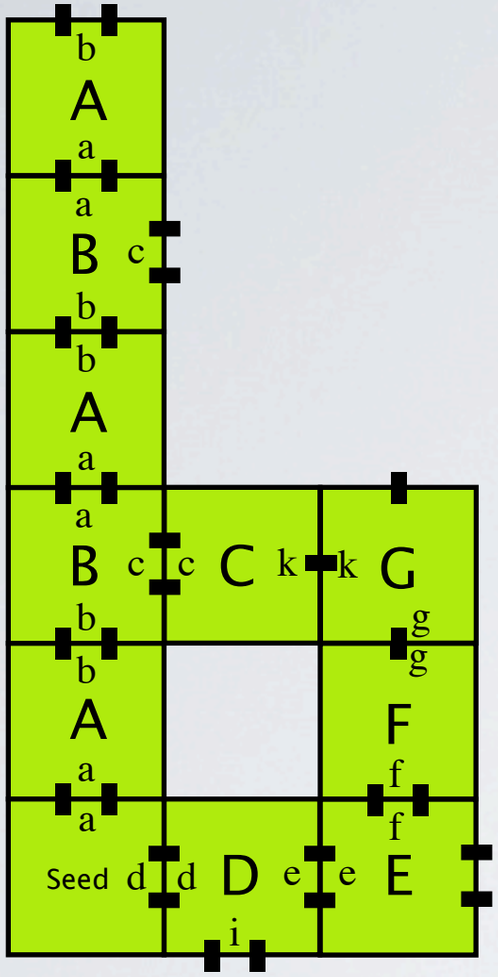

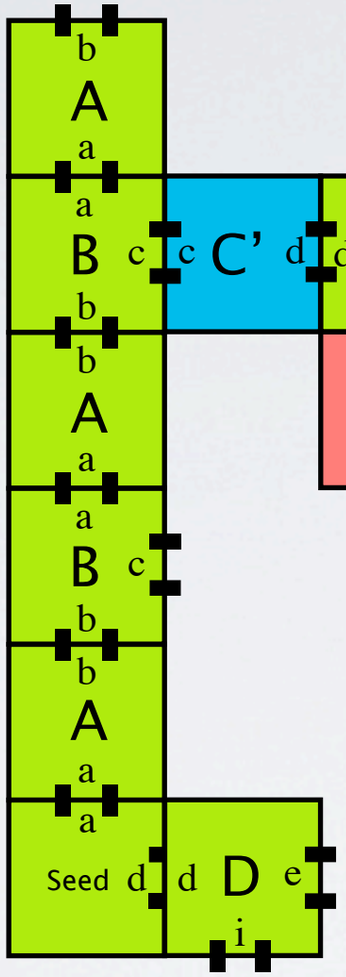

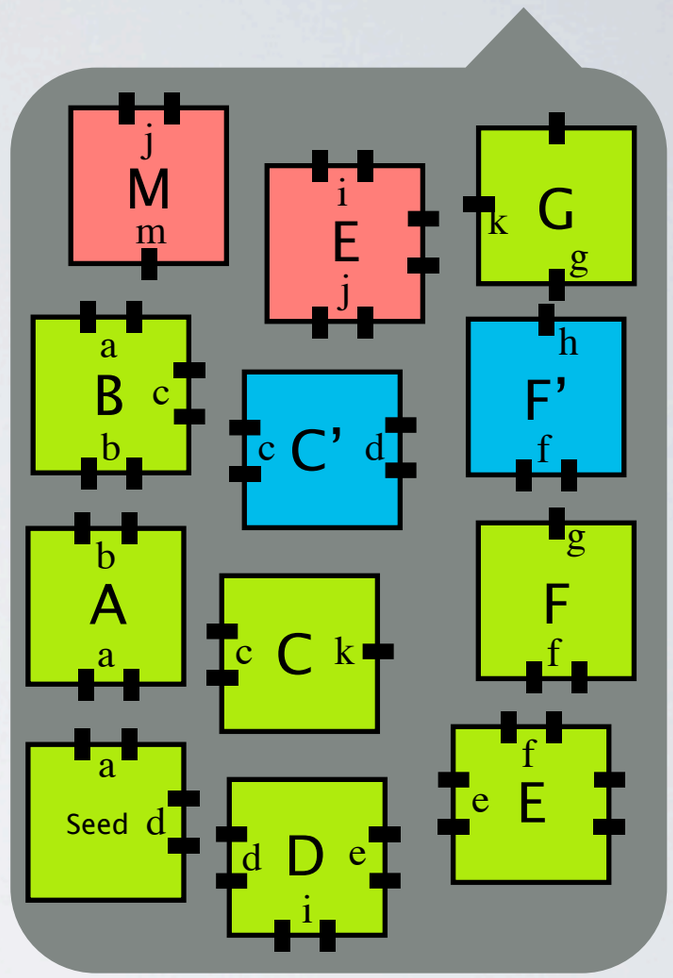

Temperature = 2

Order of tile placement is nondeterminisitc (asynchronous growth).
More than one tile type can go at a given position

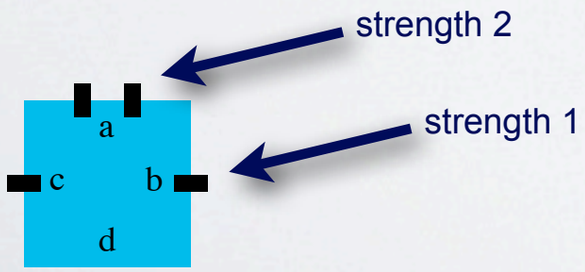

- Square units called **tiles** (non-rotatable)
- Each side has a **glue** (a,b,c,d,...)
- Each glue has a **strength** (0,1,2,3,...)
- Growth begins from a **seed** tile
- Tiles **stick** to the growing assembly if their glues match, and are strong enough (**sum of strengths** is at least the **temperature**)
- **Finite** set of tile types, unlimited supply of each tile type

Defn. Tile assembly system: tile set, seed tile, temperature

Winfree, 1998

Abstract tile assembly model

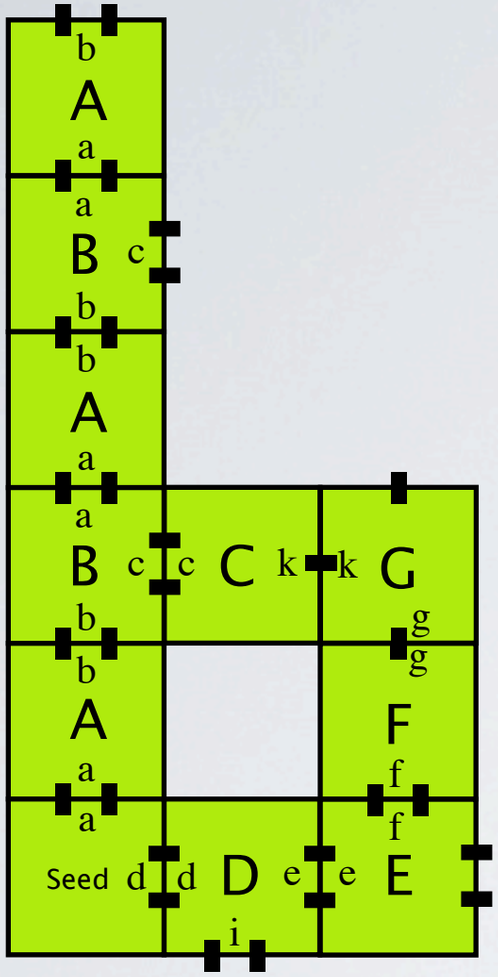

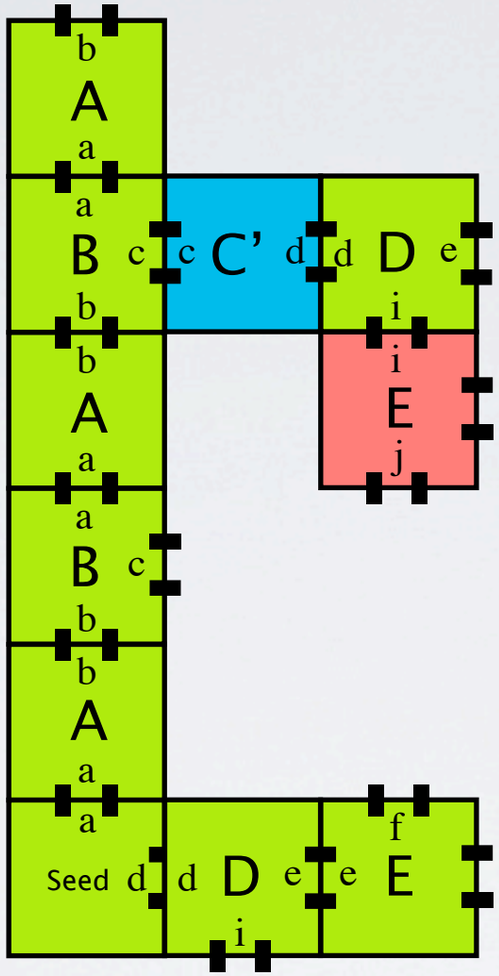

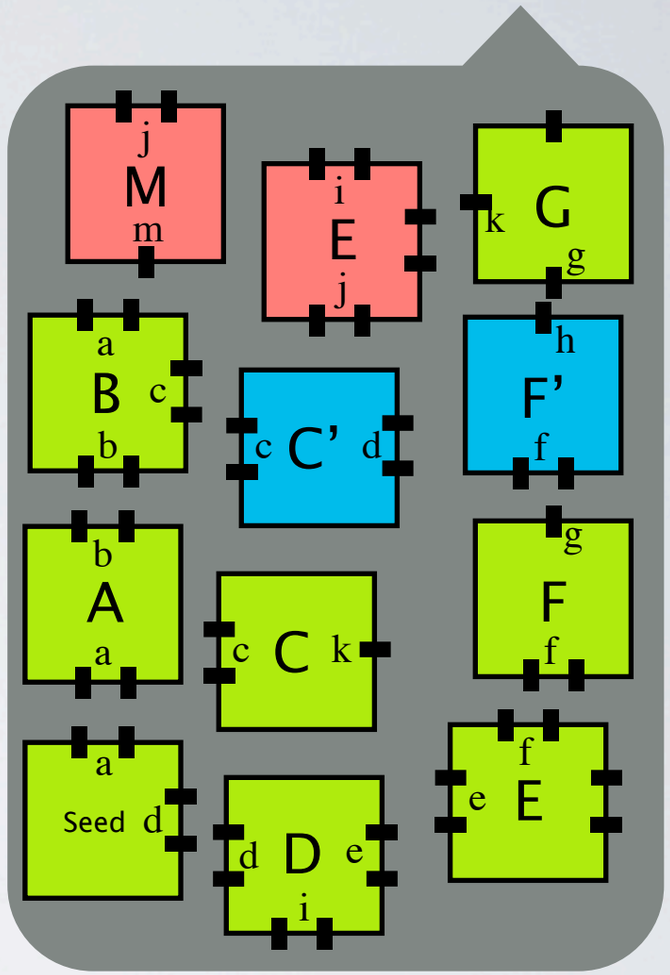

Temperature = 2

Order of tile placement is nondeterminisitc (asynchronous growth).
More than one tile type can go at a given position

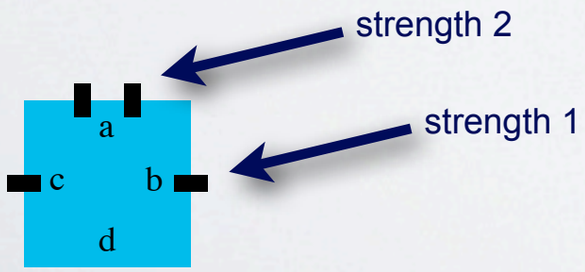

- Square units called **tiles** (non-rotatable)
- Each side has a **glue** (a,b,c,d,...)
- Each glue has a **strength** (0,1,2,3,...)
- Growth begins from a **seed** tile
- Tiles **stick** to the growing assembly if their glues match, and are strong enough (**sum of strengths** is at least the **temperature**)
- **Finite** set of tile types, unlimited supply of each tile type

Defn. Tile assembly system: tile set, seed tile, temperature

Winfree, 1998

Abstract tile assembly model

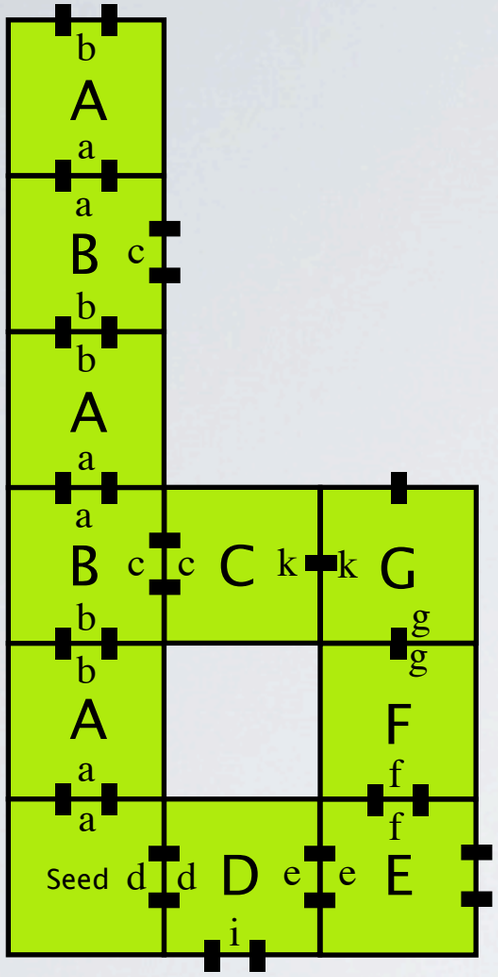

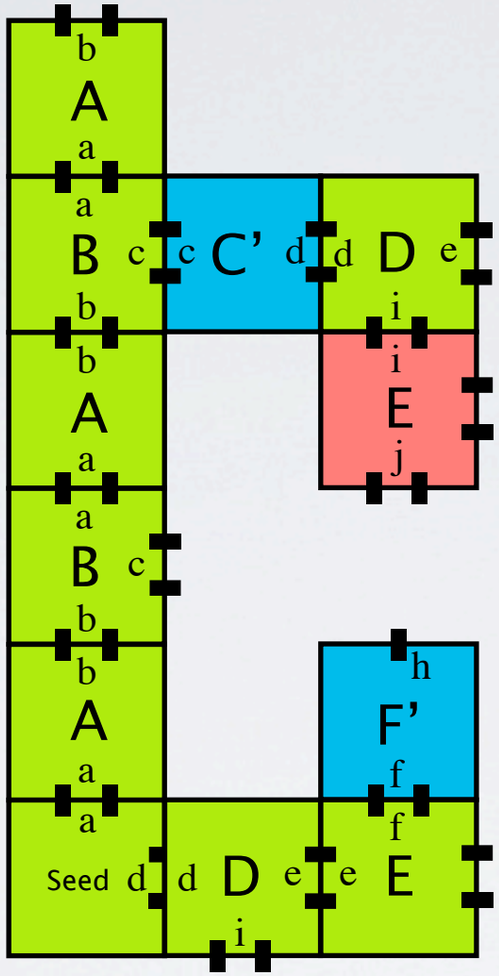

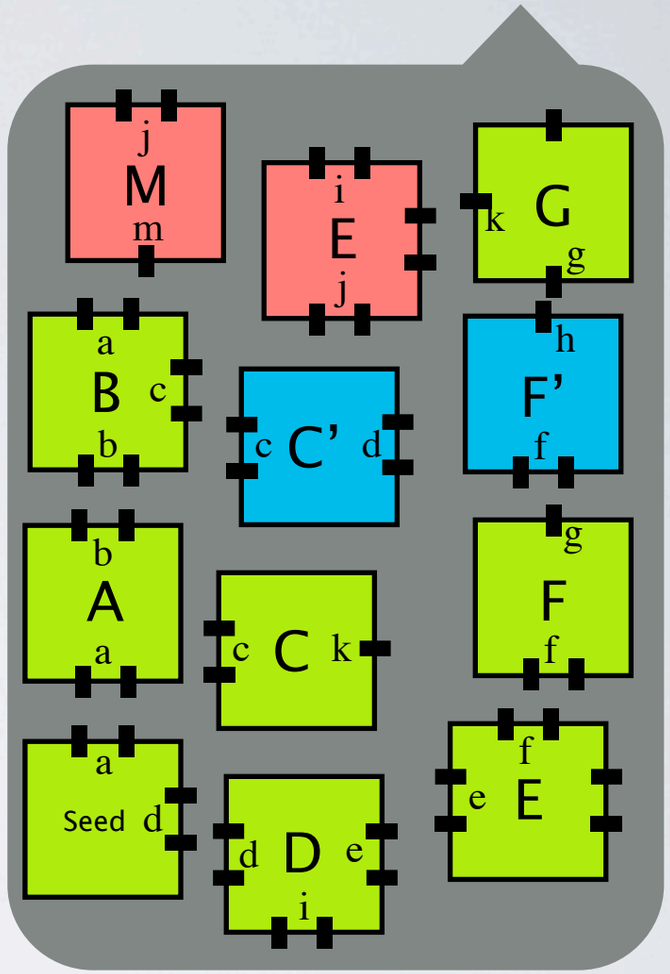

Temperature = 2

Order of tile placement is nondeterminisitc (asynchronous growth).
More than one tile type can go at a given position

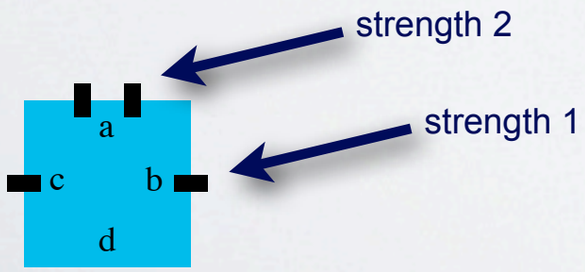

- Square units called **tiles** (non-rotatable)
- Each side has a **glue** (a,b,c,d,...)
- Each glue has a **strength** (0,1,2,3,...)
- Growth begins from a **seed** tile
- Tiles **stick** to the growing assembly if their glues match, and are strong enough (**sum of strengths** is at least the **temperature**)
- **Finite** set of tile types, unlimited supply of each tile type

Defn. Tile assembly system: tile set, seed tile, temperature

Winfree, 1998

Abstract tile assembly model

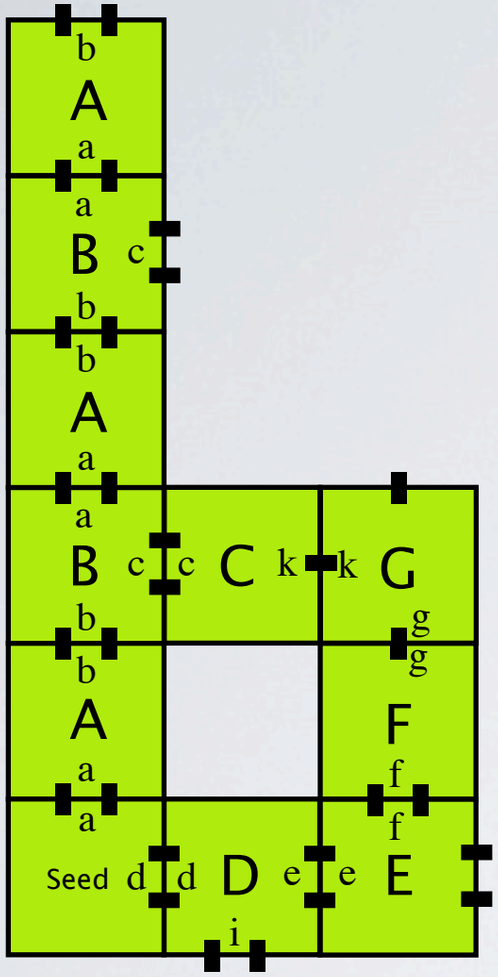

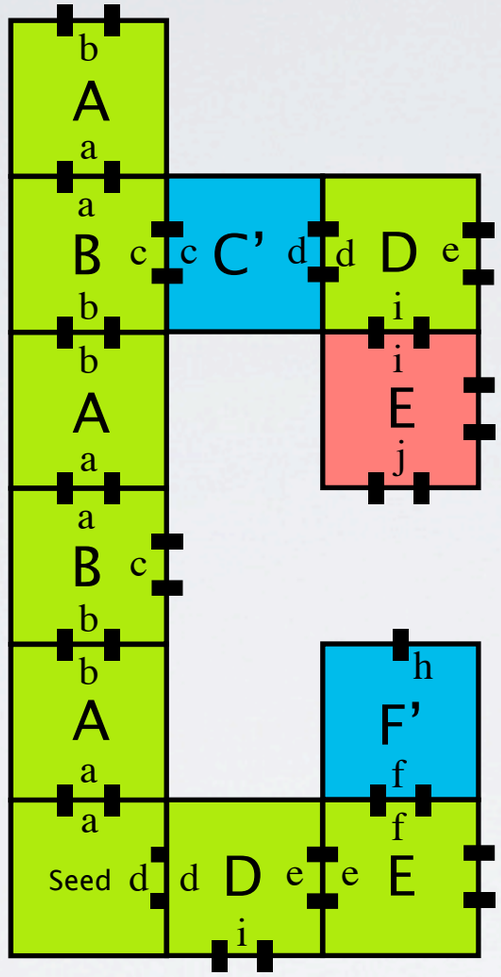

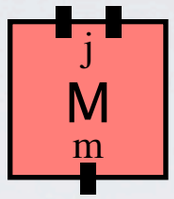

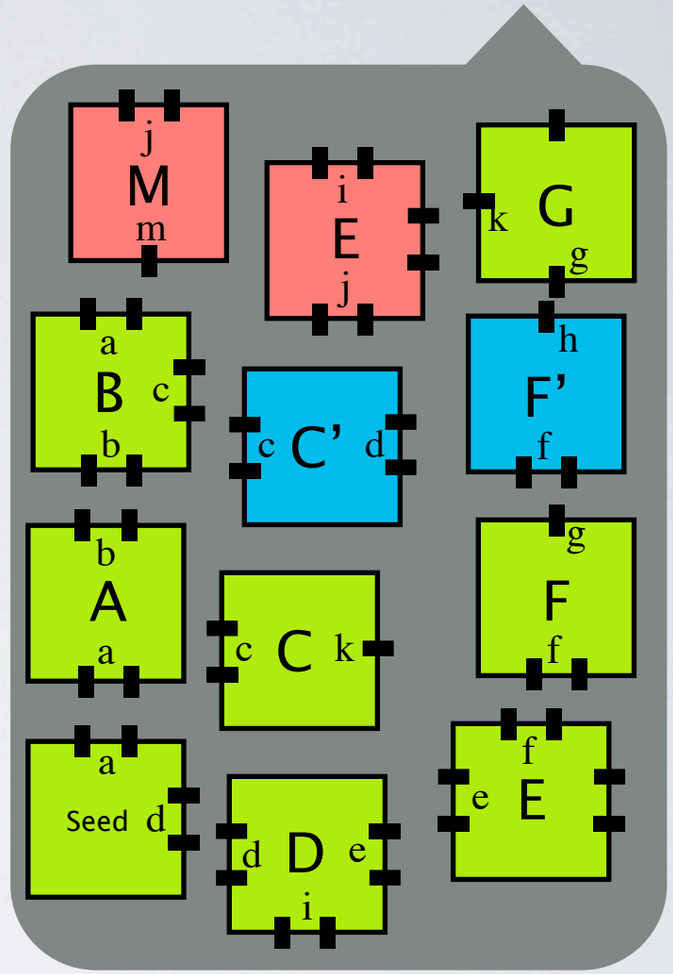

Temperature = 2

Order of tile placement is nondeterminisitc (asynchronous growth).
More than one tile type can go at a given position

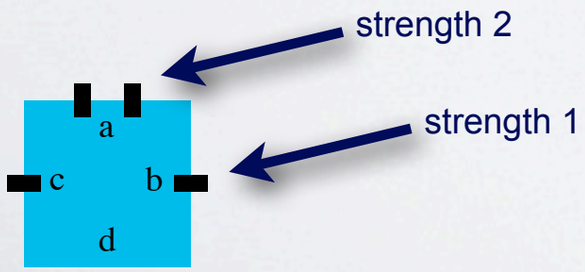

- Square units called **tiles** (non-rotatable)
- Each side has a **glue** (a,b,c,d,...)
- Each glue has a **strength** (0,1,2,3,...)
- Growth begins from a **seed** tile
- Tiles **stick** to the growing assembly if their glues match, and are strong enough (**sum of strengths** is at least the **temperature**)
- **Finite** set of tile types, unlimited supply of each tile type

Defn. Tile assembly system: tile set, seed tile, temperature

Winfree, 1998

Abstract tile assembly model

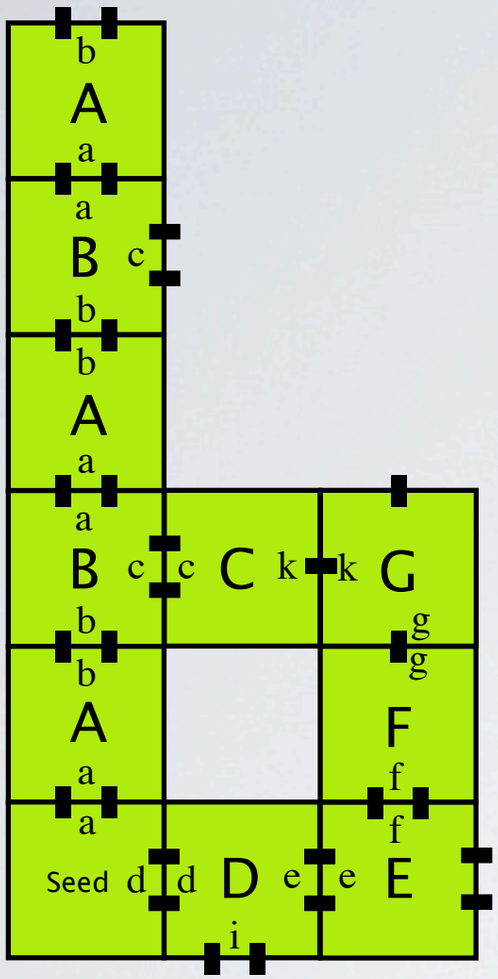

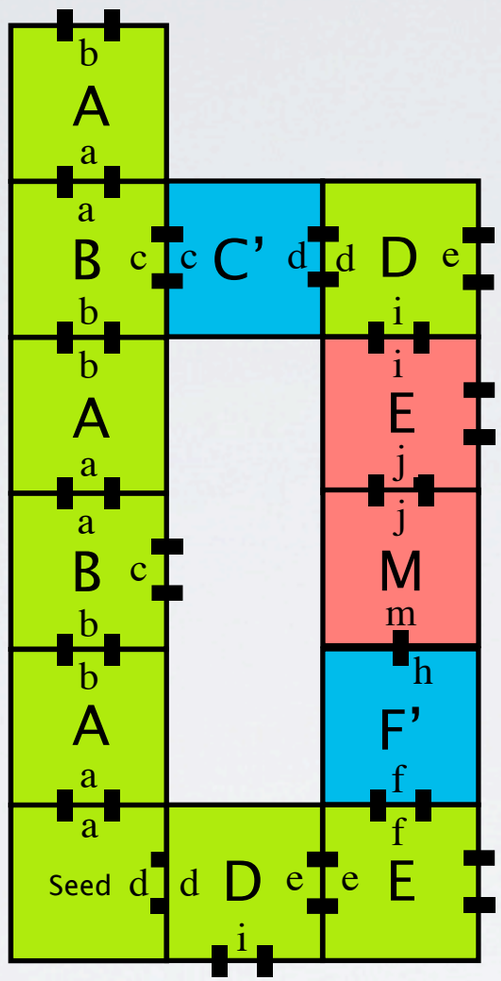

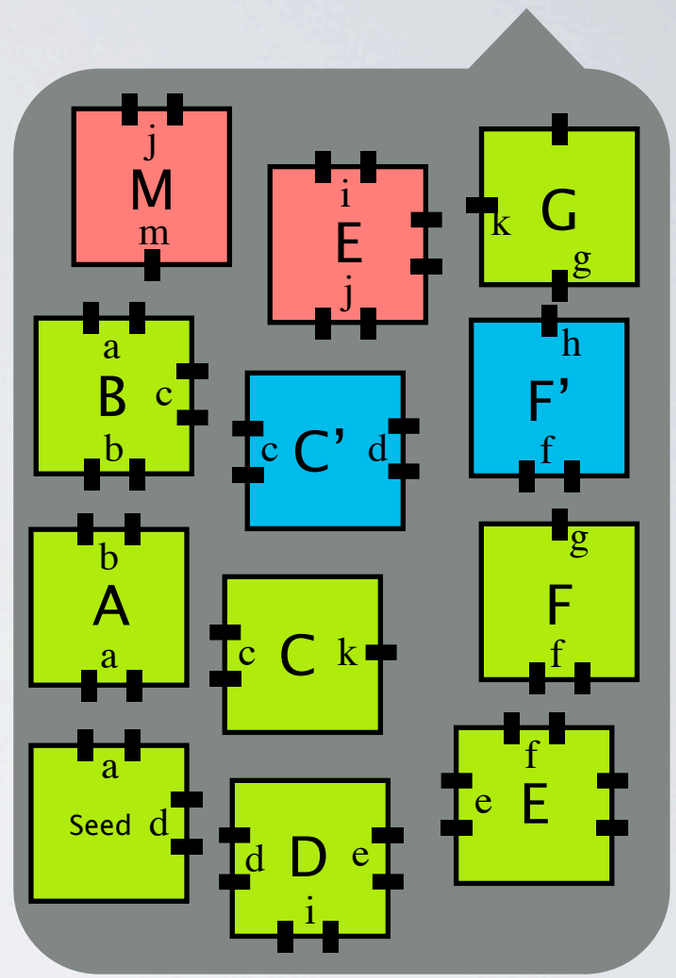

Temperature = 2

Order of tile placement is nondeterminisitc (asynchronous growth).
More than one tile type can go at a given position

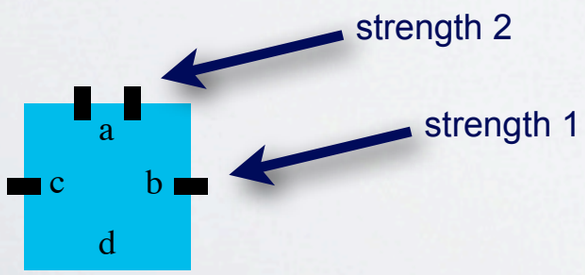

- Square units called **tiles** (non-rotatable)
- Each side has a **glue** (a,b,c,d,...)
- Each glue has a **strength** (0,1,2,3,...)
- Growth begins from a **seed** tile
- Tiles **stick** to the growing assembly if their glues match, and are strong enough (**sum of strengths** is at least the **temperature**)
- **Finite** set of tile types, unlimited supply of each tile type

Defn. Tile assembly system: tile set, seed tile, temperature

Winfree, 1998

Abstract tile assembly model

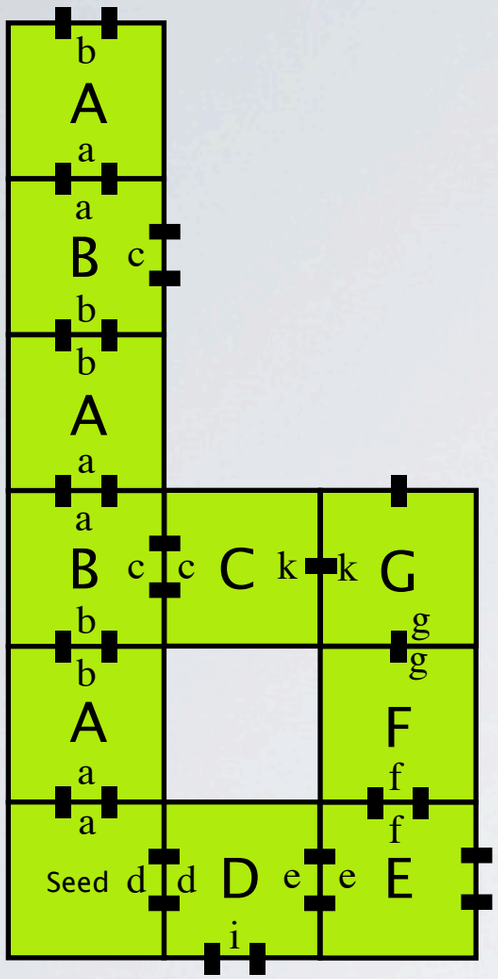

Temperature = 2

Order of tile placement is nondeterminisitc (asynchronous growth).
More than one tile type can go at a given position

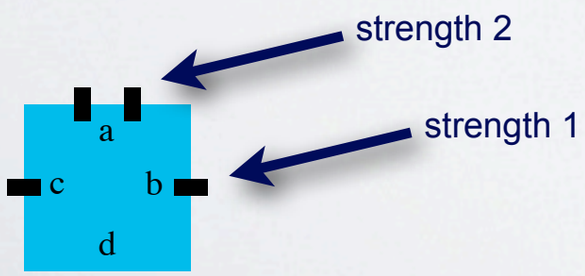

- Square units called **tiles** (non-rotatable)
- Each side has a **glue** (a,b,c,d,...)
- Each glue has a **strength** (0,1,2,3,...)
- Growth begins from a **seed** tile
- Tiles **stick** to the growing assembly if their glues match, and are strong enough (**sum of strengths** is at least the **temperature**)
- **Finite** set of tile types, unlimited supply of each tile type

Defn. Tile assembly system: tile set, seed tile, temperature

Winfree, 1998

Algorithmic self-assembly with tiles: computation and geometry

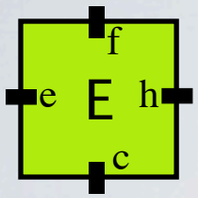

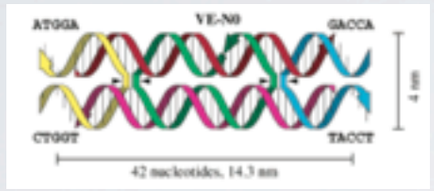

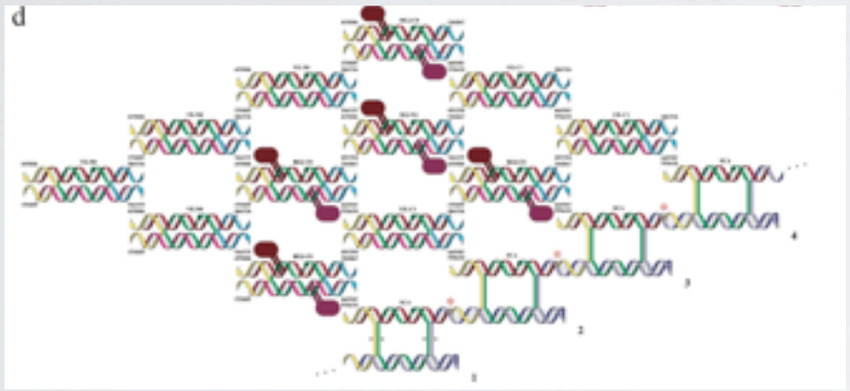

Barish, Rothemund, Winfree 2005

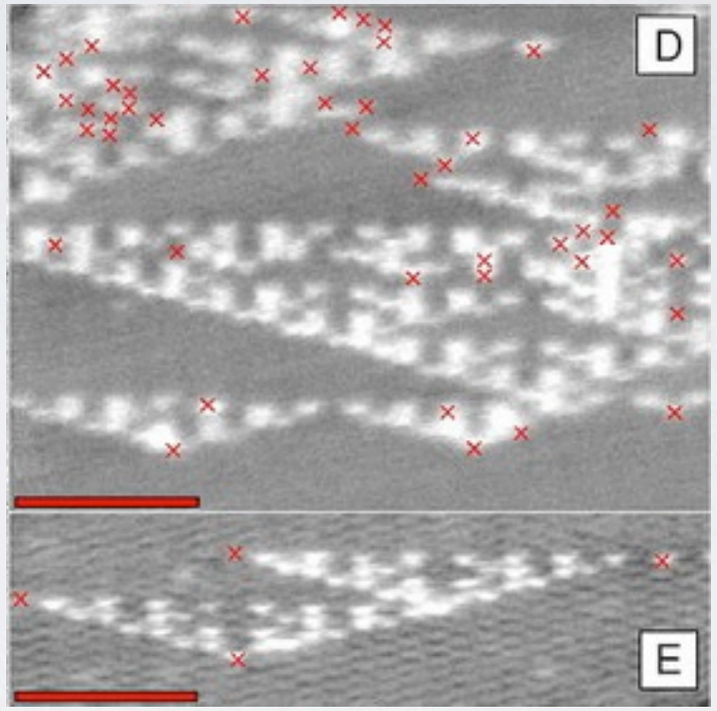

Rothemund, Papadakis, Winfree 2004

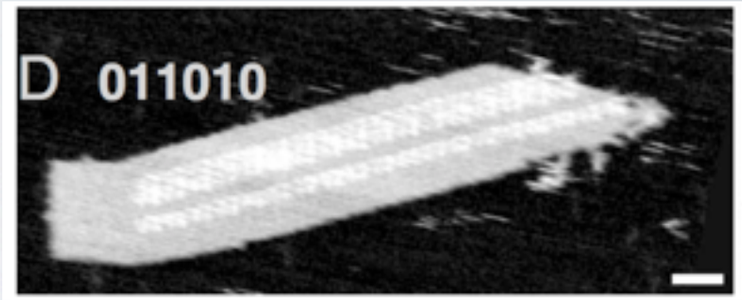

Barish, Schulman Rothemund, Winfree 2009

- Seeman built tiles out of DNA in the laboratory
- Winfree showed that DNA tiles can run algorithms (much like cellular automata, Wang tiles)
- A variety of algorithmic tile assembly systems have been built from DNA

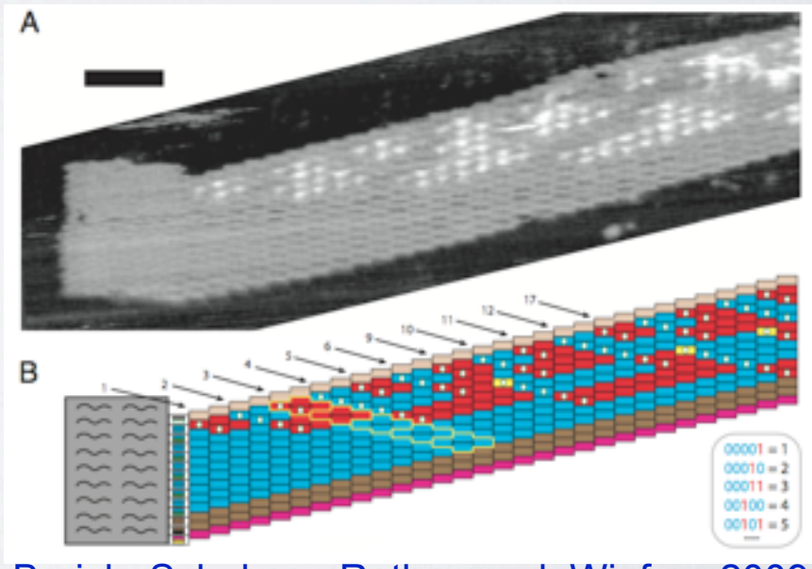

Barish, Schulman Rothemund, Winfree 2009

Computation with tile assembly

- Turing universality

  Winfree, 1998

- Efficient assembly of simple shapes
  - E.g. n x n squares using $\Theta(\log n / \log\log n)$ tile types

    Rothemund, Winfree. STOC 2000

- Efficient assembly of complicated connected shapes using a number of tile types roughly equal to the Kolmogorov complexity of the shape

  Soloveichik, Winfree. SICOMP 2007

Intrinsic universality

http://otcametapixel.blogspot.com/
http://www.youtube.com/watch?v=xP5-iIeKXE8

Intrinsic universality

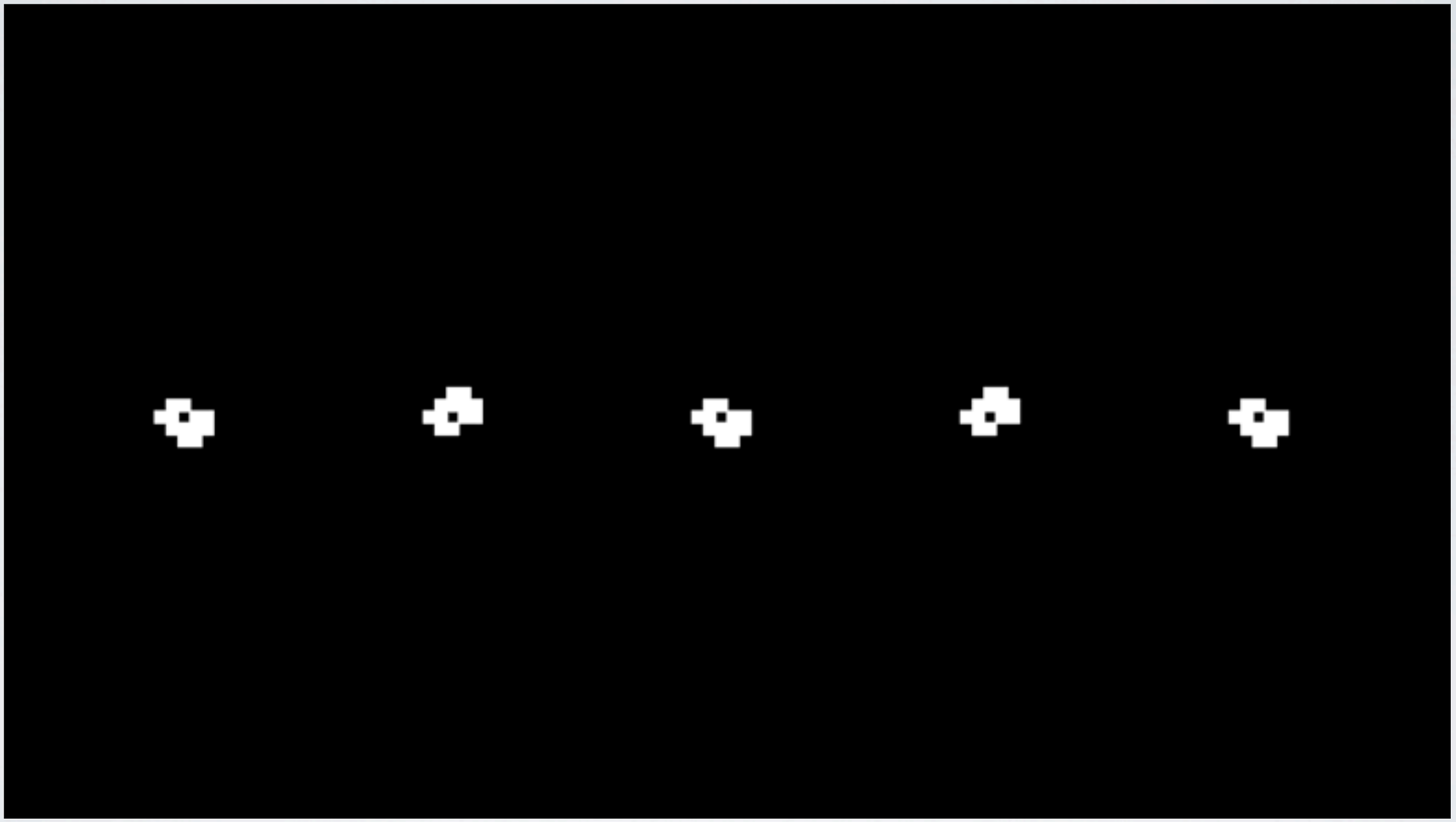

http://otcametapixel.blogspot.com/
http://www.youtube.com/watch?v=xP5-iIeKXE8

Intrinsic universality

- Conway's Game of Life is an intrinsically universal cellular automaton

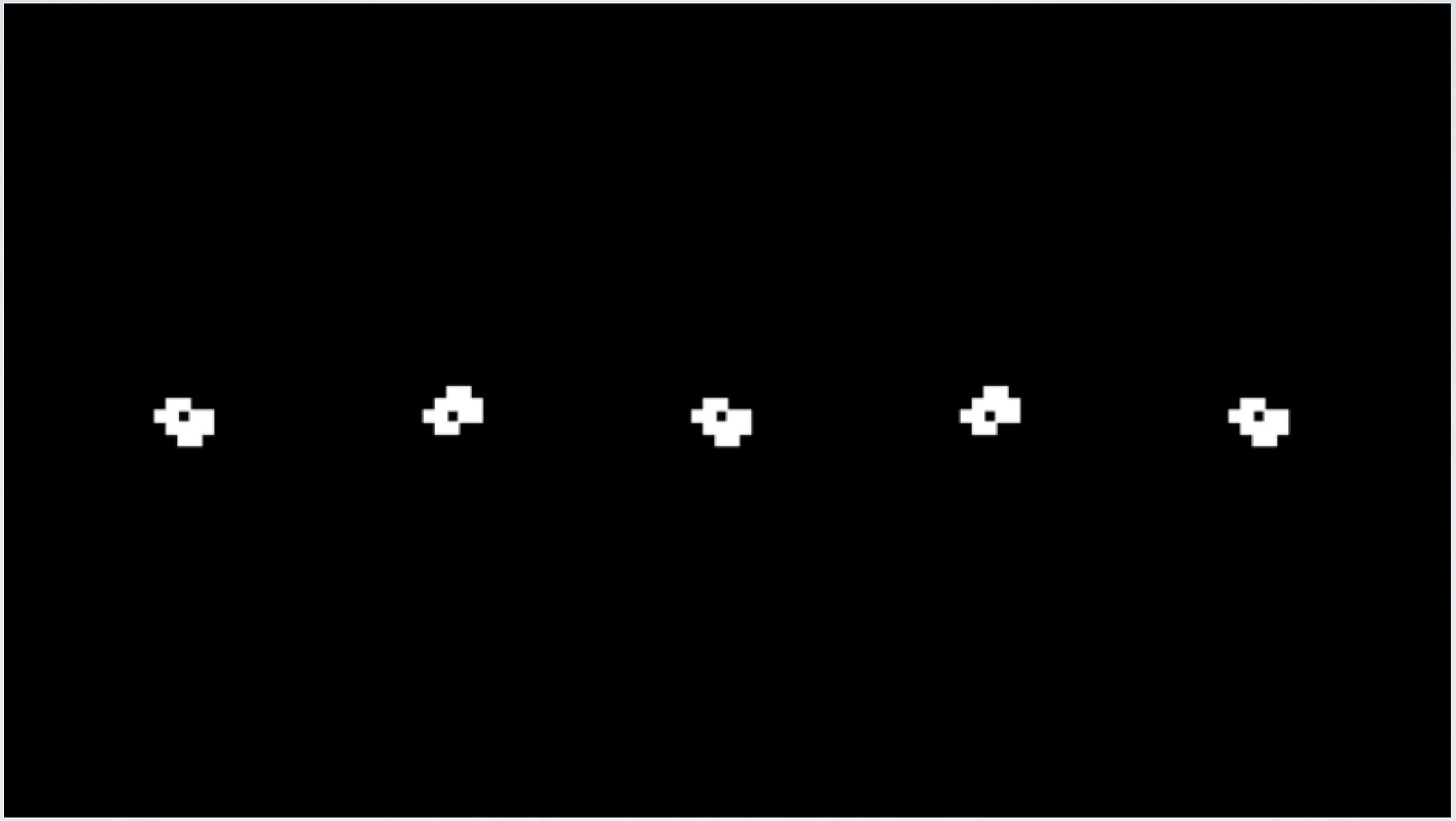

http://otcametapixel.blogspot.com/
http://www.youtube.com/watch?v=xP5-iIeKXE8

Durand, Roka, The game of life: universality revisited. 1999

Intrinsic universality

- An intrinsically universal CA is one that “simulates” any other:
  - Appropriate encoding
  - Encodes all properties of the simulated CA, up to rescaling

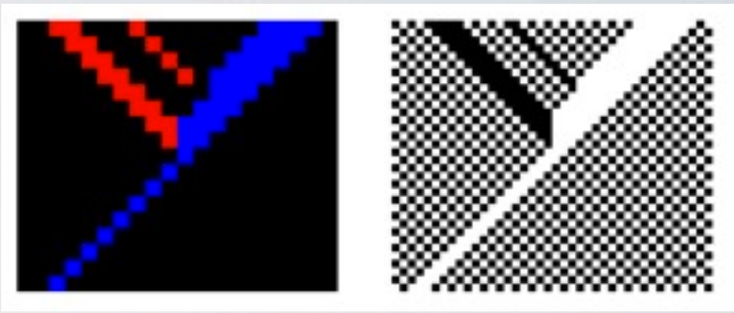

“Just gliders” Rule 184

Rule 184 simulates “Just gliders” via a time and space rescaling (encoding)
Stolen, and vertically flipped, from G. Theyssier’s slides

- Theory of intrinsic universality in CA

- Applications:
  - separating class of cellular automata based on their simulation abilities
  - use of non-intrinsic universality results to prove that certain cellular automata are “computationally weak”

Is the abstract tile assembly model intrinsically universal?

Is the abstract tile assembly model intrinsically universal?

Yes!

Is the abstract tile assembly model intrinsically universal?

Yes!

There is a single universal tile set *U* that simulates *any* tile assembly system

Doty, Lutz, Patitz, Schweller, Summers, Woods. FOCS 2012

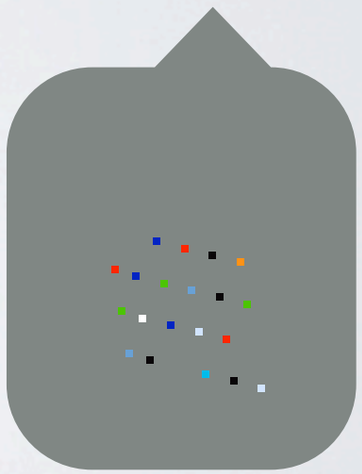

Universal tile set

Our journey

aTAM, $\tau \geq 2$ (IU [11])

Simulation definition

- We want a definition of simulation that captures the notion of one Tile Assembly System simulating the “behaviour” of another
- $\mathcal{T}$ is a (any) simulated tile assembly system,
  - $\mathcal{T}$ = (tileset T, seed assembly σ, temperature τ)
- Tile assembly system $\mathcal{U}_{\mathcal{T}}$ = (U, $\sigma_{\mathcal{T}}$, 2) simulates $\mathcal{T}$ if:
  - Tiles from T are simulated by m x m supertiles in $\mathcal{U}_{\mathcal{T}}$, i.e., a representation function R maps supertiles in assemblies of $\mathcal{U}_{\mathcal{T}}$, to tiles in T. Oh, and R is “clean”.
  - The producible assemblies in $\mathcal{U}_{\mathcal{T}}$ represent exactly the producible assemblies in $\mathcal{T}$.
  - Ignoring m x m scaling, dynamics are equivalent in $\mathcal{U}_{\mathcal{T}}$ & $\mathcal{T}$.

Simulation definition

Universal (simulator) tile set

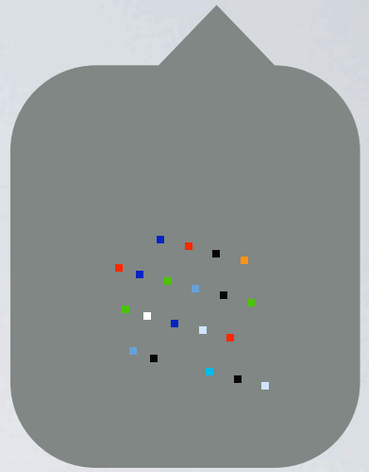

Temperature = 2

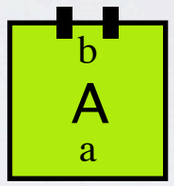

Simulated tile

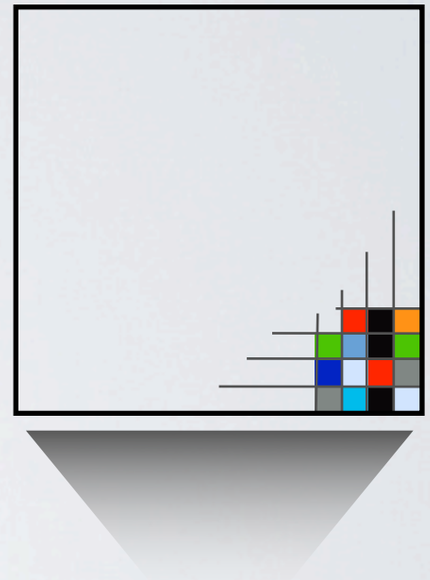

Simulator supertile

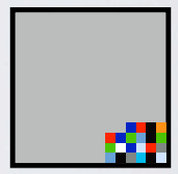

- Tiles are simulated by supertiles
- For each assembly sequence in the simulated tile system, there is an assembly sequence in the simulator, and vice-versa

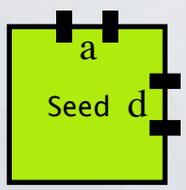

Preassembled seed structure (encodes simulated TAS)

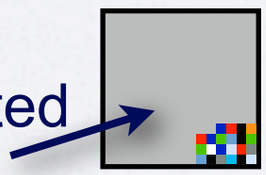

Simulation definition

Universal (simulator) tile set

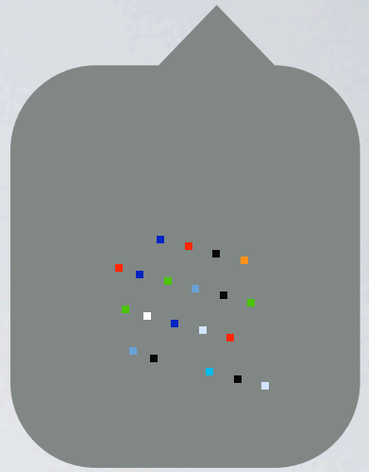

Temperature = 2

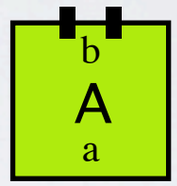

Simulated tile

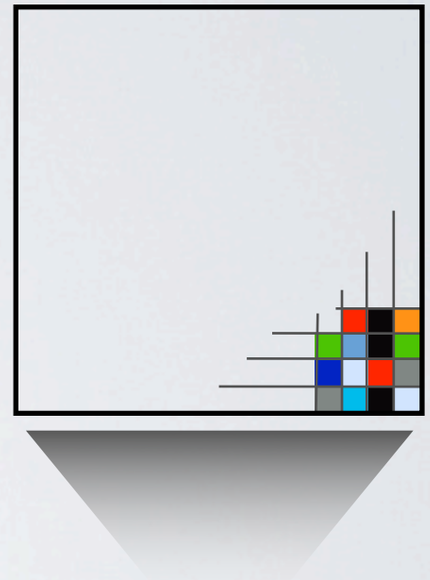

Simulator supertile

- Tiles are simulated by supertiles
- For each assembly sequence in the simulated tile system, there is an assembly sequence in the simulator, and vice-versa

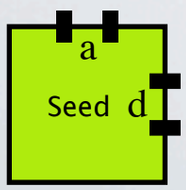

Preassembled seed structure (encodes simulated TAS)

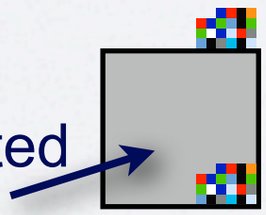

Simulation definition

Universal (simulator) tile set

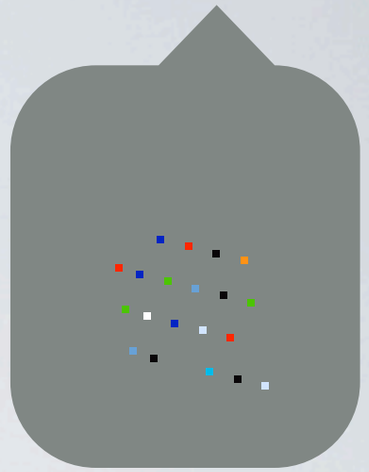

Temperature = 2

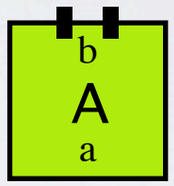

Simulated tile

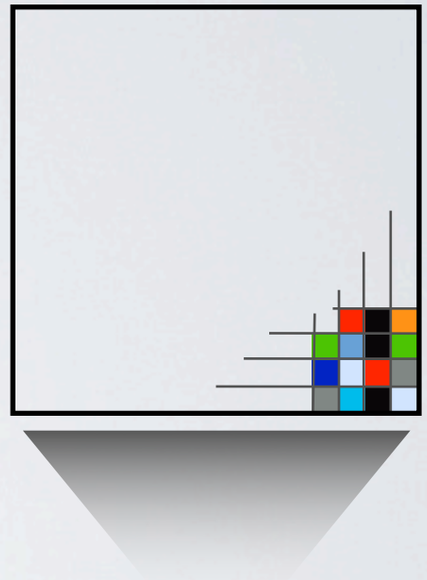

Simulator supertile

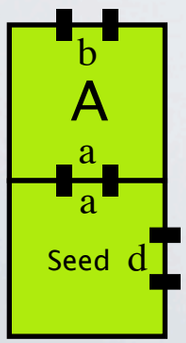

Preassembled seed structure (encodes simulated TAS)

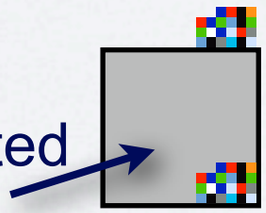

- Tiles are simulated by supertiles
- For each assembly sequence in the simulated tile system, there is an assembly sequence in the simulator, and vice-versa

Simulation definition

Universal (simulator) tile set

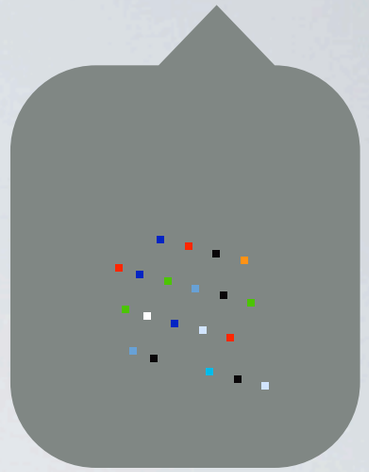

Temperature = 2

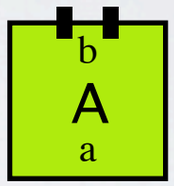

Simulated tile

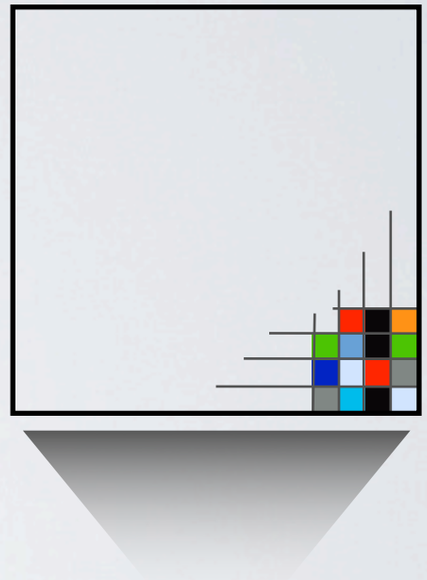

Simulator supertile

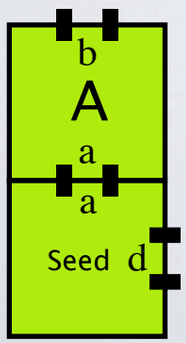

Preassembled seed structure (encodes simulated TAS)

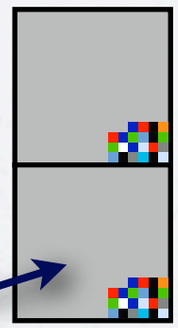

- Tiles are simulated by supertiles
- For each assembly sequence in the simulated tile system, there is an assembly sequence in the simulator, and vice-versa

Simulation definition

Universal (simulator) tile set

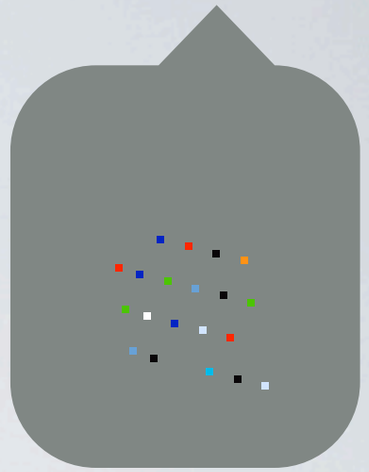

Temperature = 2

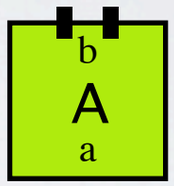

Simulated tile

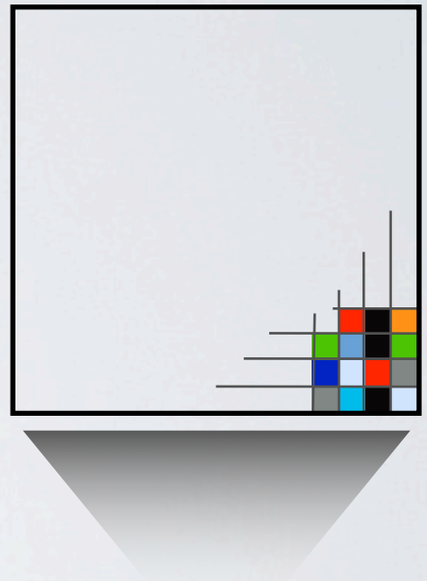

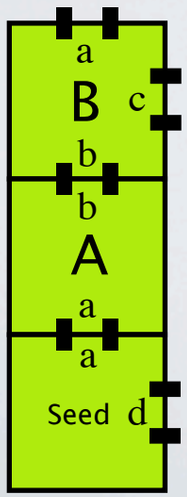

Preassembled seed structure (encodes simulated TAS)

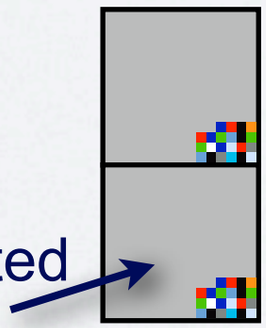

Simulator supertile

- Tiles are simulated by supertiles
- For each assembly sequence in the simulated tile system, there is an assembly sequence in the simulator, and vice-versa

Simulation definition

Universal (simulator) tile set

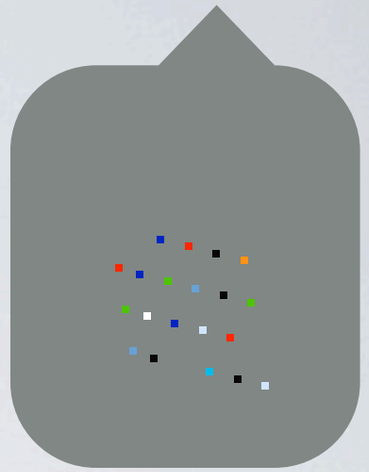

Temperature = 2

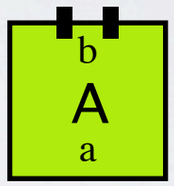

Simulated tile

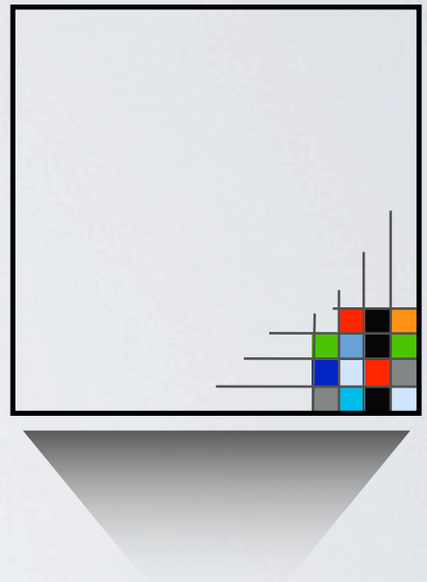

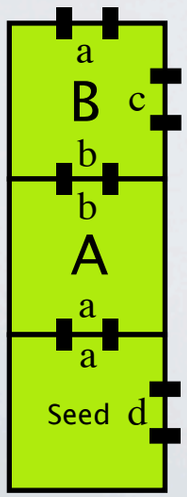

Preassembled seed structure (encodes simulated TAS)

Simulator supertile

- Tiles are simulated by supertiles
- For each assembly sequence in the simulated tile system, there is an assembly sequence in the simulator, and vice-versa

Simulation definition

Universal (simulator) tile set

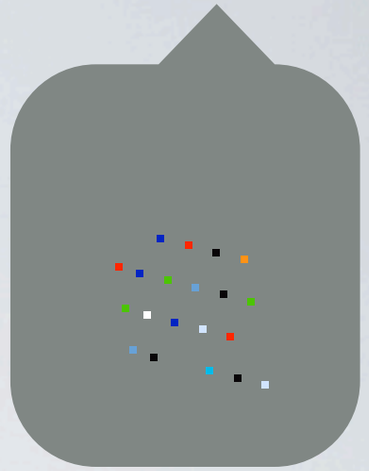

Temperature = 2

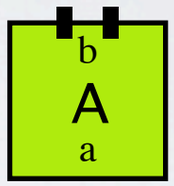

Simulated tile

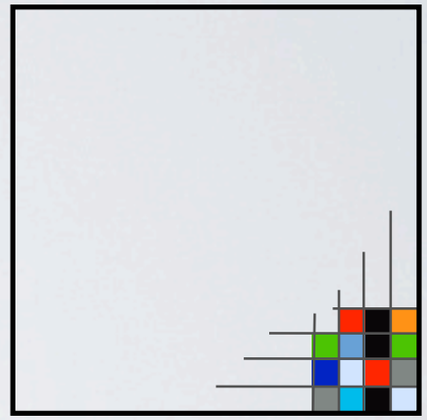

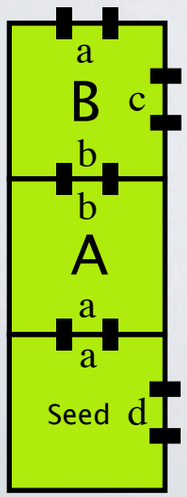

Preassembled seed structure (encodes simulated TAS)

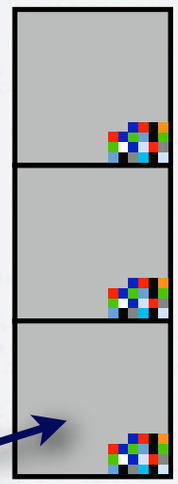

Simulator supertile

- Tiles are simulated by supertiles
- For each assembly sequence in the simulated tile system, there is an assembly sequence in the simulator, and vice-versa

Simulation definition

Universal (simulator) tile set

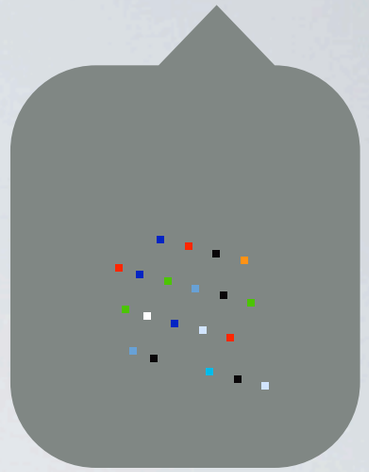

Temperature = 2

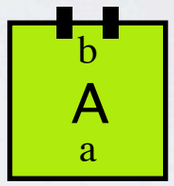

Simulated tile

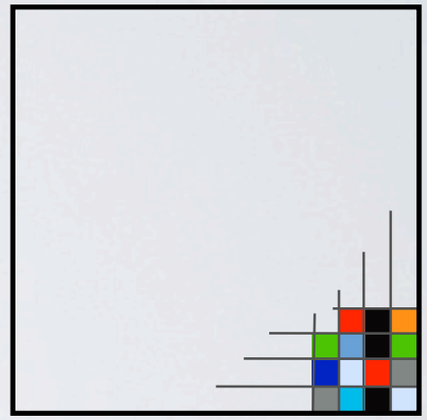

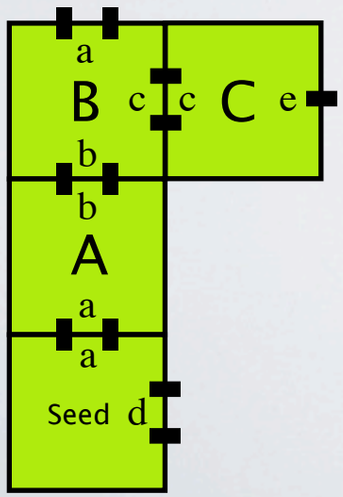

Preassembled seed structure (encodes simulated TAS)

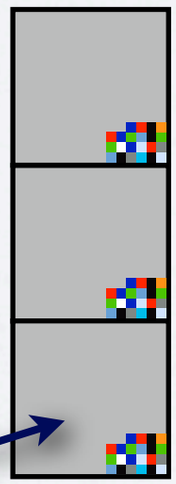

Simulator supertile

- Tiles are simulated by supertiles
- For each assembly sequence in the simulated tile system, there is an assembly sequence in the simulator, and vice-versa

Simulation definition

Universal (simulator) tile set

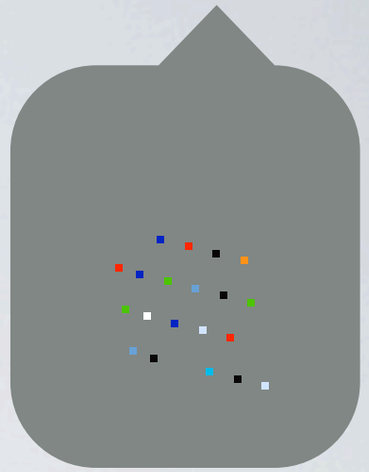

Temperature = 2

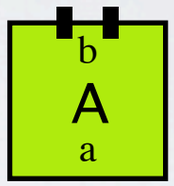

Simulated tile

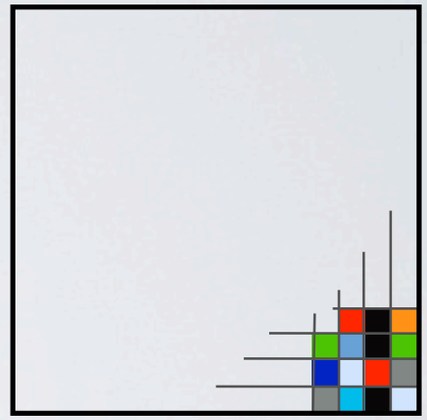

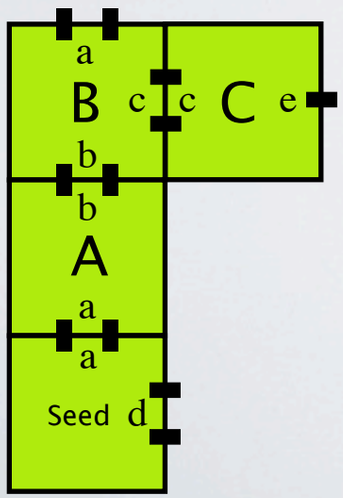

Preassembled seed structure (encodes simulated TAS)

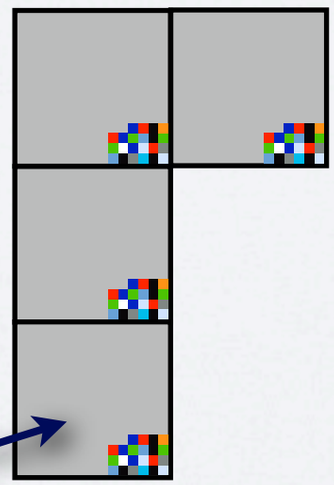

Simulator supertile

- Tiles are simulated by supertiles
- For each assembly sequence in the simulated tile system, there is an assembly sequence in the simulator, and vice-versa

Simulation definition

Universal (simulator) tile set

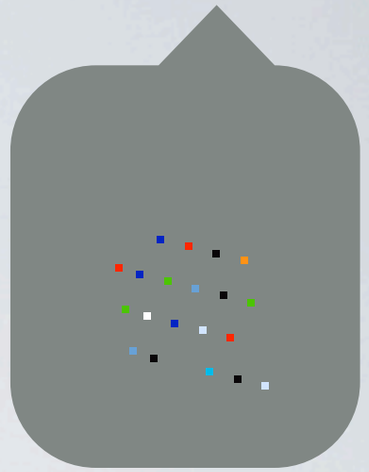

Temperature = 2

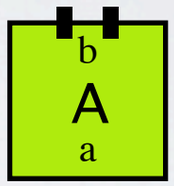

Simulated tile

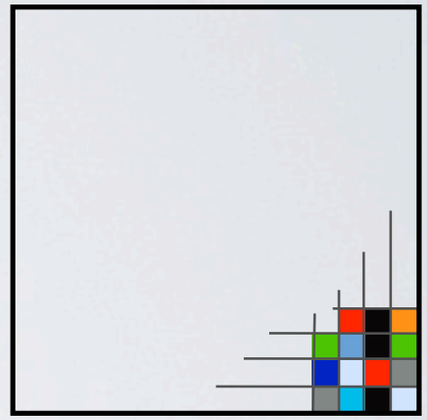

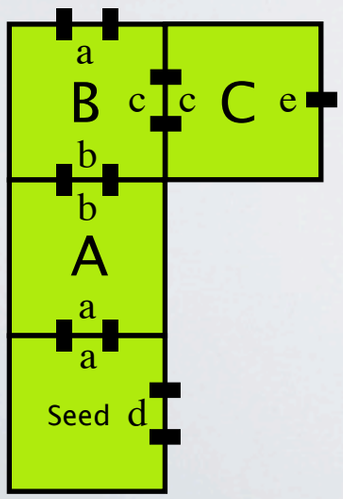

Preassembled seed structure (encodes simulated TAS)

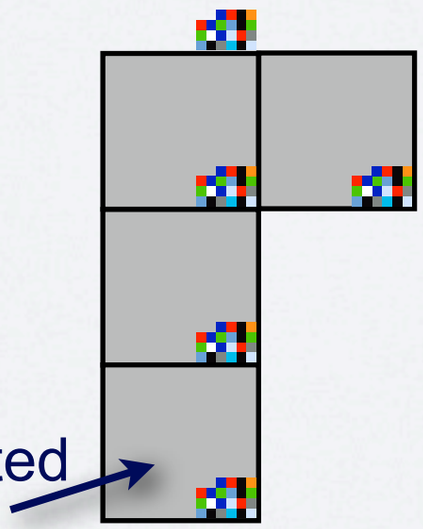

Simulator supertile

- Tiles are simulated by supertiles
- For each assembly sequence in the simulated tile system, there is an assembly sequence in the simulator, and vice-versa

Simulation definition

Universal (simulator) tile set

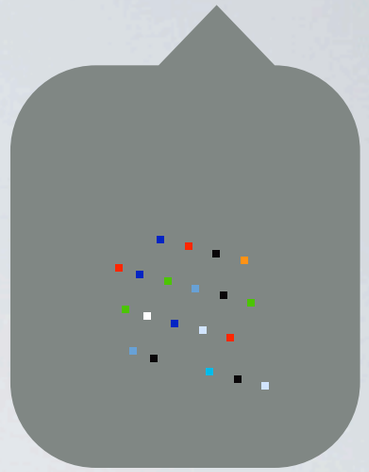

Temperature = 2

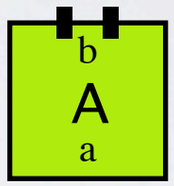

Simulated tile

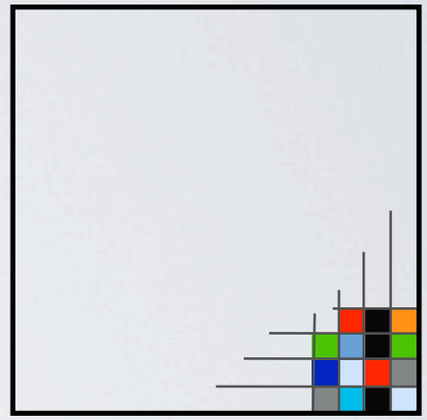

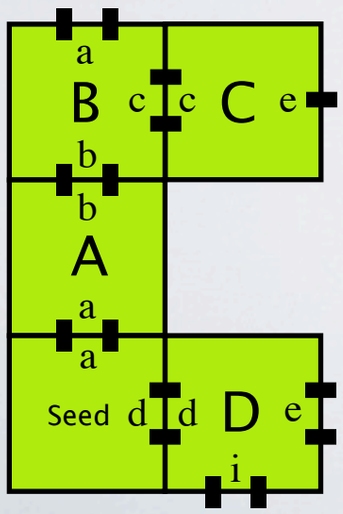

Preassembled seed structure (encodes simulated TAS)

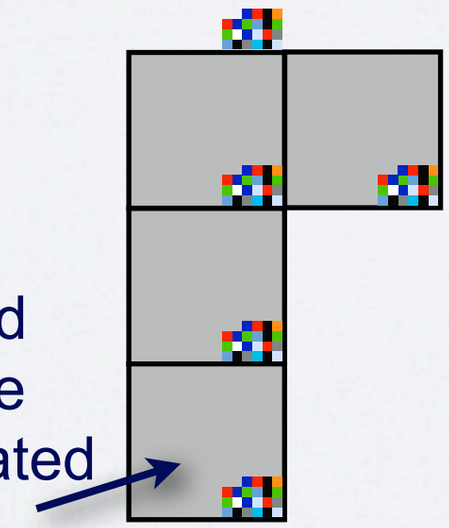

Simulator supertile

- Tiles are simulated by supertiles
- For each assembly sequence in the simulated tile system, there is an assembly sequence in the simulator, and vice-versa

Simulation definition

Universal (simulator) tile set

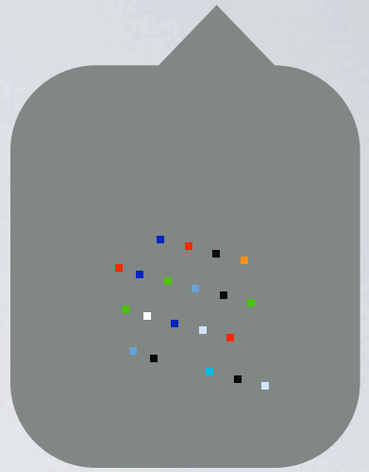

Temperature = 2

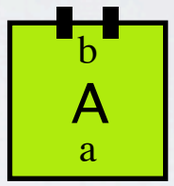

Simulated tile

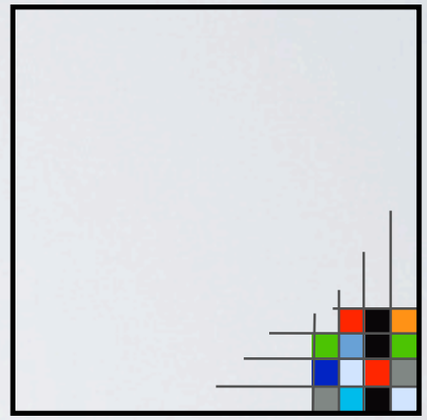

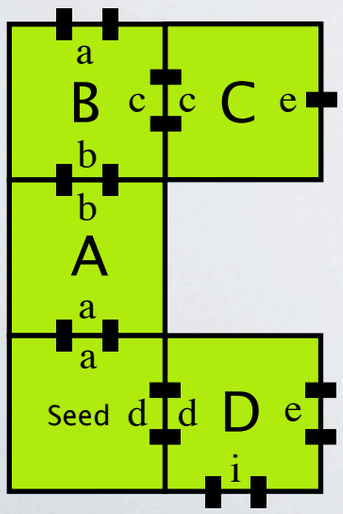

Preassembled seed structure (encodes simulated TAS)

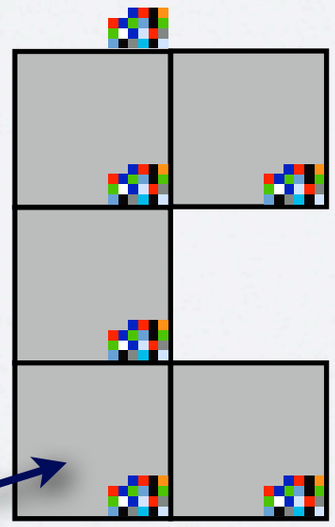

Simulator supertile

- Tiles are simulated by supertiles
- For each assembly sequence in the simulated tile system, there is an assembly sequence in the simulator, and vice-versa

Simulation definition

Universal (simulator) tile set

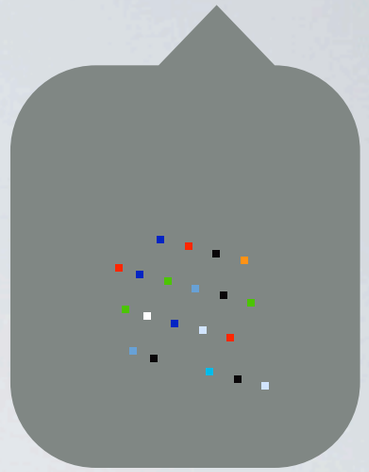

Temperature = 2

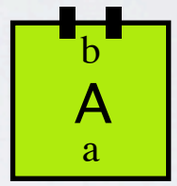

Simulated tile

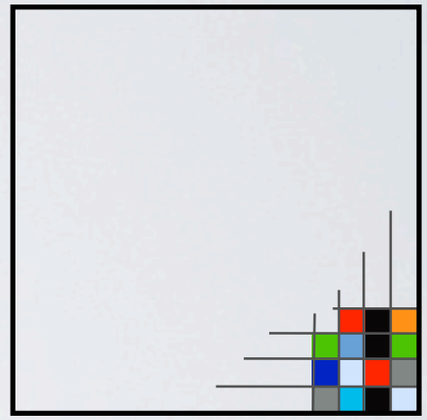

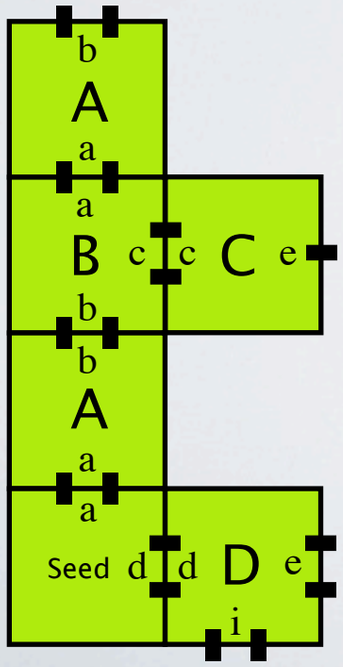

Preassembled seed structure (encodes simulated TAS)

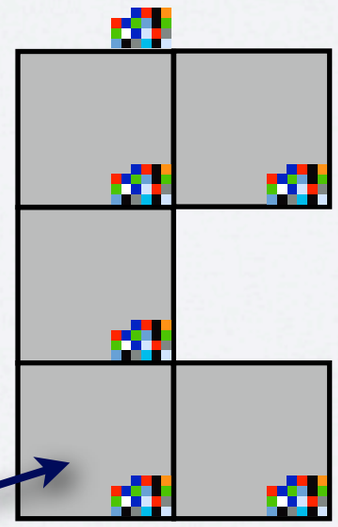

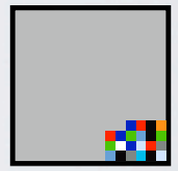

Simulator supertile

- Tiles are simulated by supertiles
- For each assembly sequence in the simulated tile system, there is an assembly sequence in the simulator, and vice-versa

Simulation definition

Universal (simulator) tile set

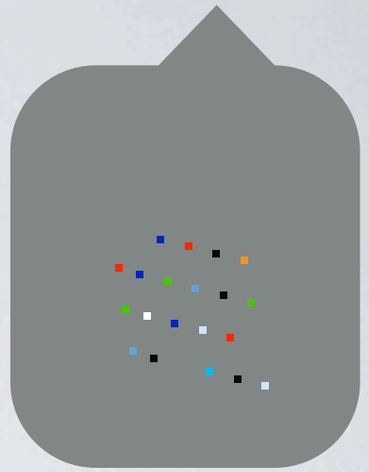

Temperature = 2

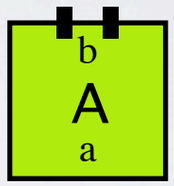

Simulated tile

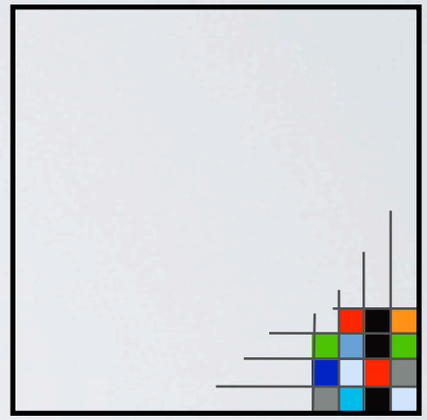

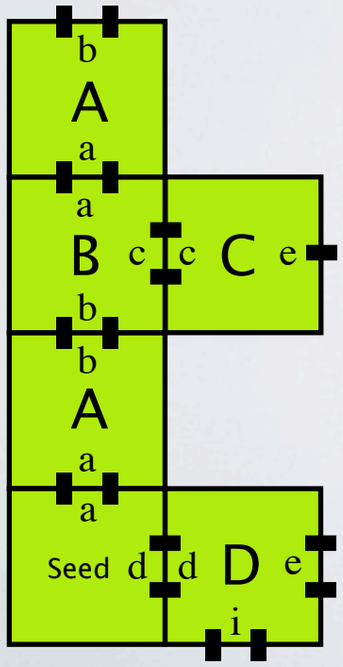

Preassembled seed structure (encodes simulated TAS)

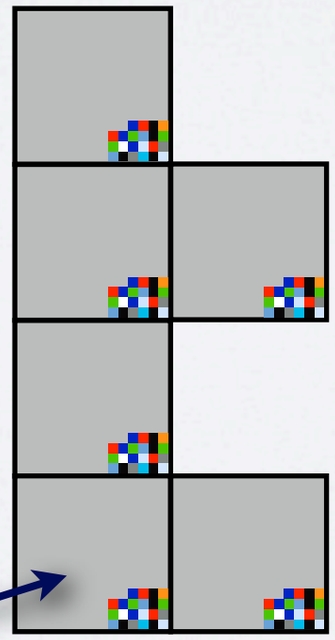

Simulator supertile

- Tiles are simulated by supertiles
- For each assembly sequence in the simulated tile system, there is an assembly sequence in the simulator, and vice-versa

Simulation definition

Universal (simulator) tile set

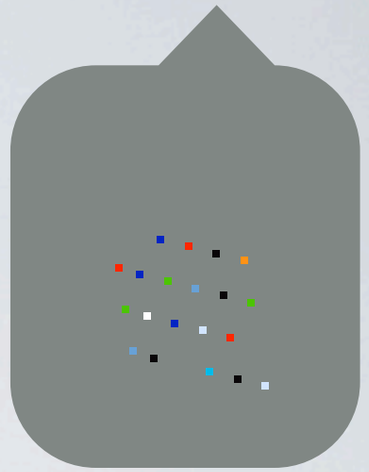

Temperature = 2

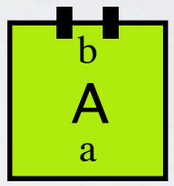

Simulated tile

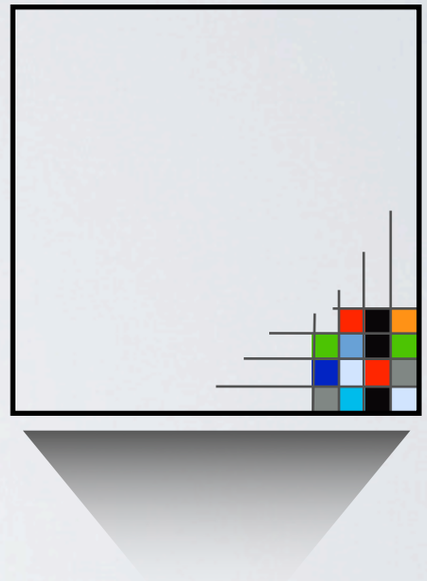

Simulator supertile

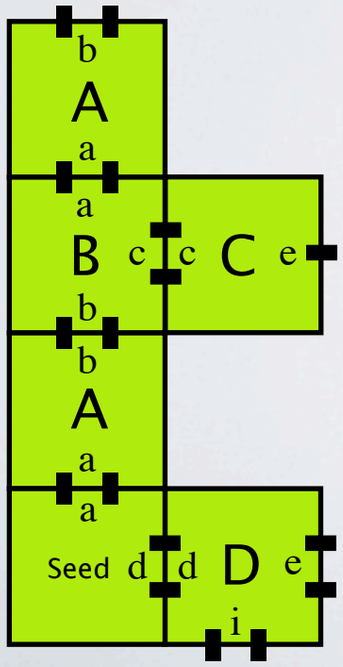

Preassembled seed structure (encodes simulated TAS)

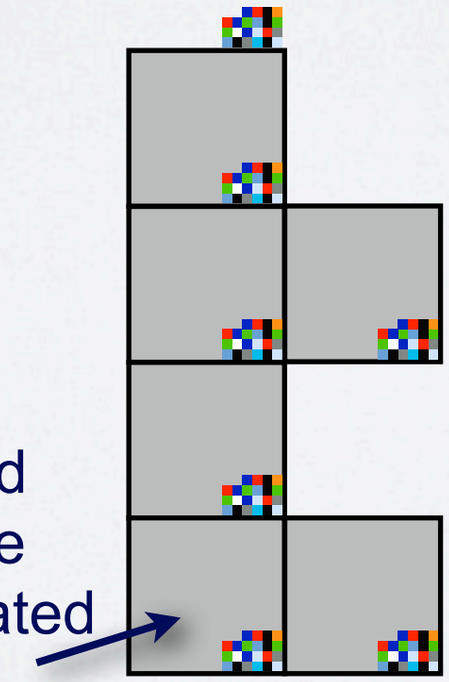

- Tiles are simulated by supertiles
- For each assembly sequence in the simulated tile system, there is an assembly sequence in the simulator, and vice-versa

Simulation definition

Universal (simulator) tile set

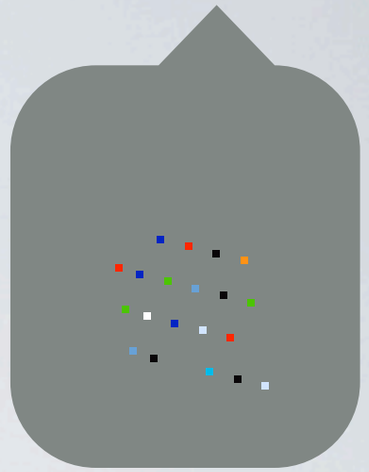

Temperature = 2

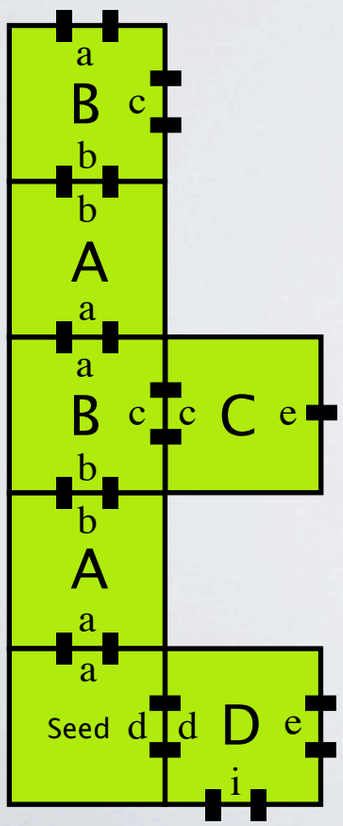

Preassembled seed structure (encodes simulated TAS)

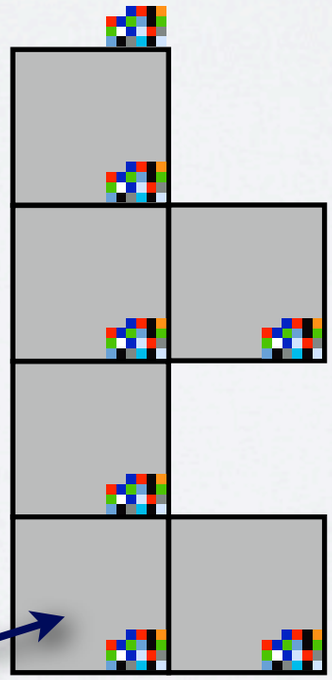

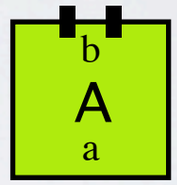

Simulated tile

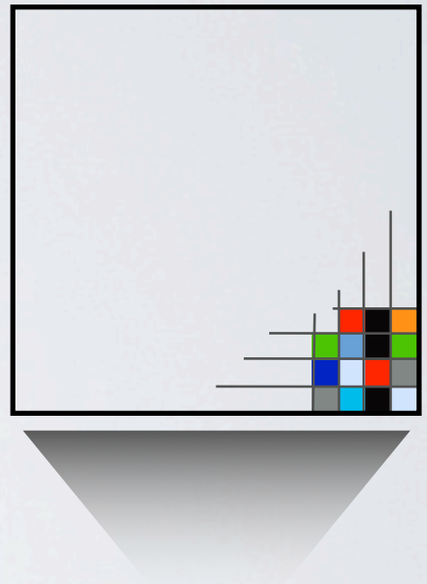

Simulator supertile

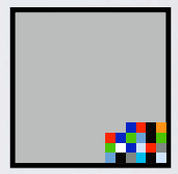

- Tiles are simulated by supertiles
- For each assembly sequence in the simulated tile system, there is an assembly sequence in the simulator, and vice-versa

Simulation definition

Universal (simulator) tile set

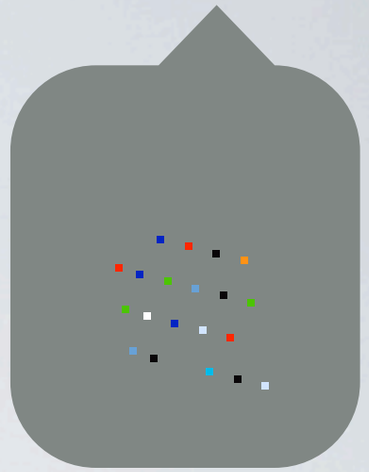

Temperature = 2

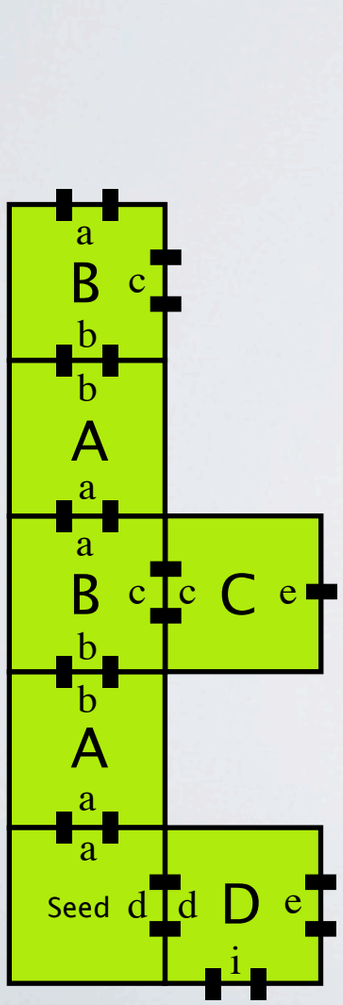

Preassembled seed structure (encodes simulated TAS)

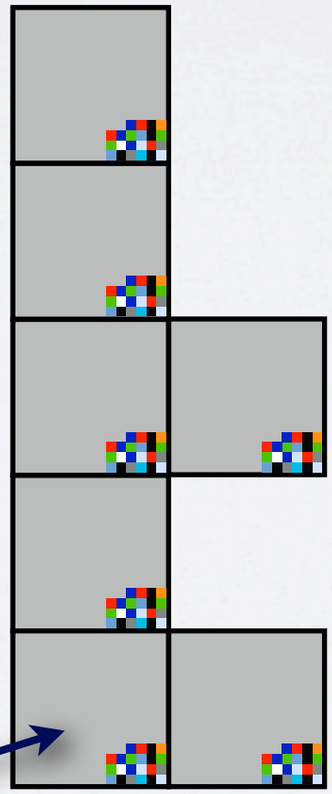

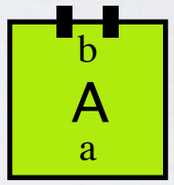

Simulated tile

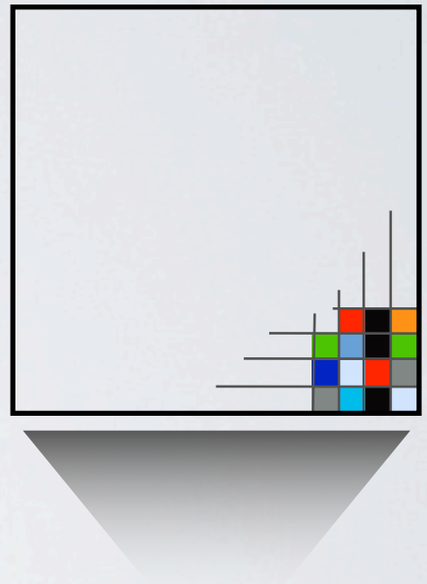

Simulator supertile

- Tiles are simulated by supertiles
- For each assembly sequence in the simulated tile system, there is an assembly sequence in the simulator, and vice-versa

Simulation definition

Universal (simulator) tile set

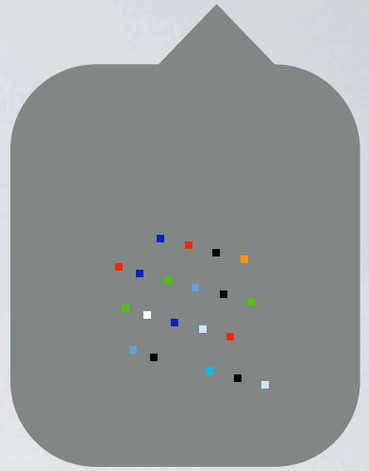

Temperature = 2

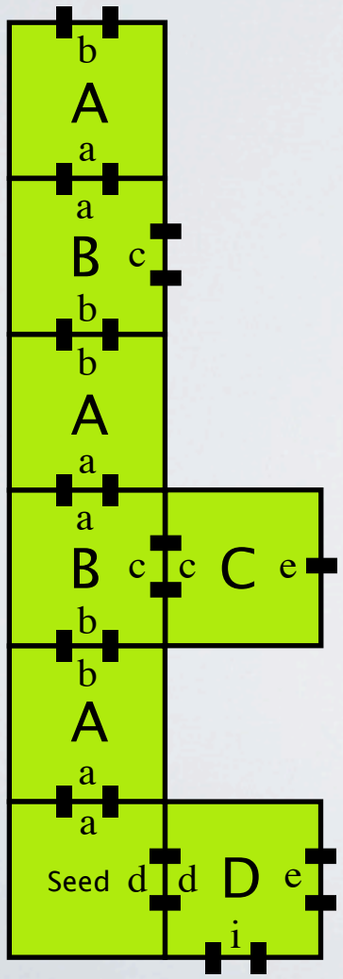

Preassembled seed structure (encodes simulated TAS)

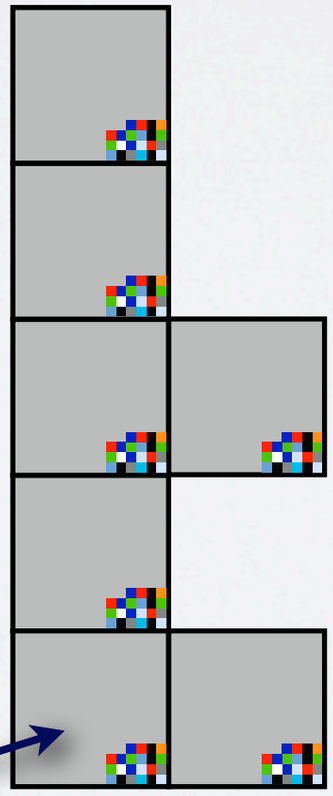

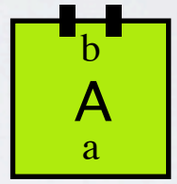

Simulated tile

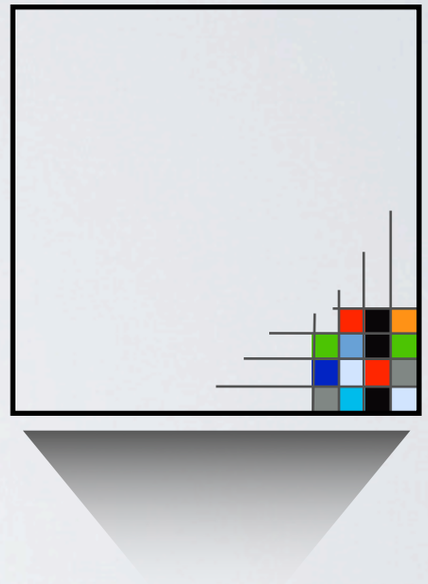

Simulator supertile

- Tiles are simulated by supertiles
- For each assembly sequence in the simulated tile system, there is an assembly sequence in the simulator, and vice-versa

Simulation definition

Universal (simulator) tile set

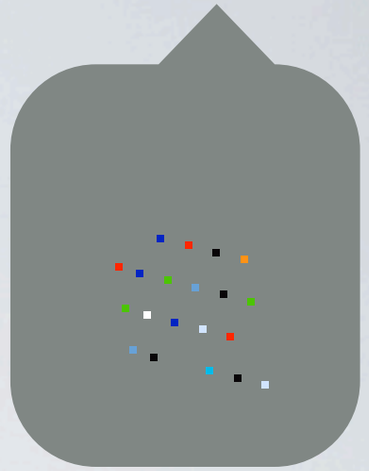

Temperature = 2

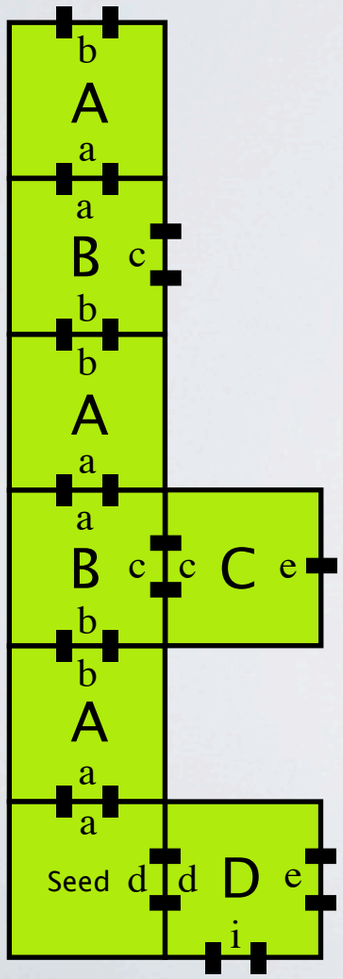

Preassembled seed structure (encodes simulated TAS)

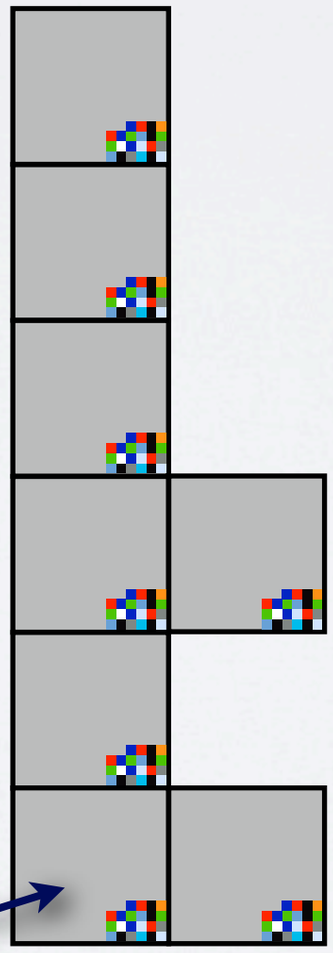

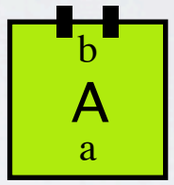

Simulated tile

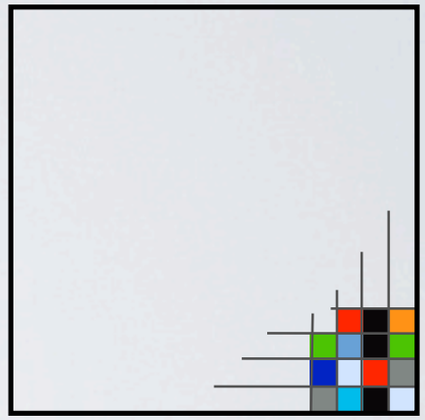

Simulator supertile

- Tiles are simulated by supertiles
- For each assembly sequence in the simulated tile system, there is an assembly sequence in the simulator, and vice-versa

Simulation definition

Universal (simulator) tile set

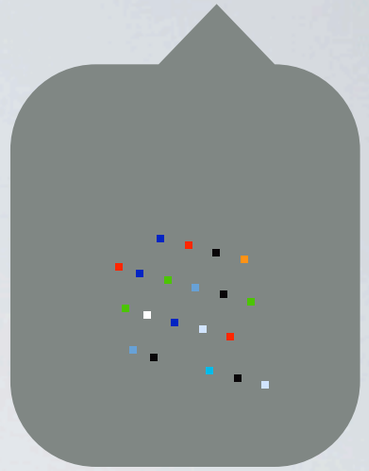

Temperature = 2

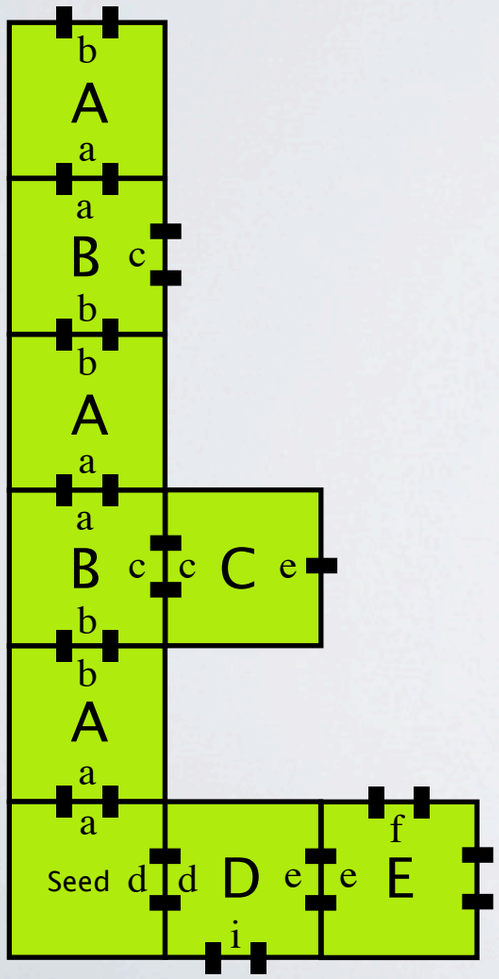

Preassembled seed structure (encodes simulated TAS)

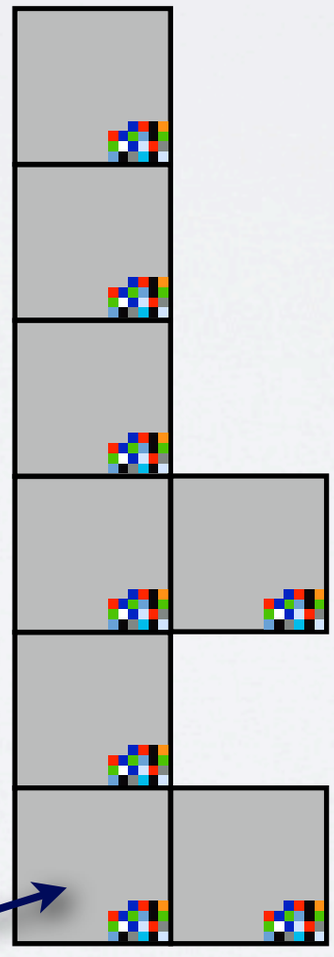

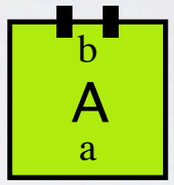

Simulated tile

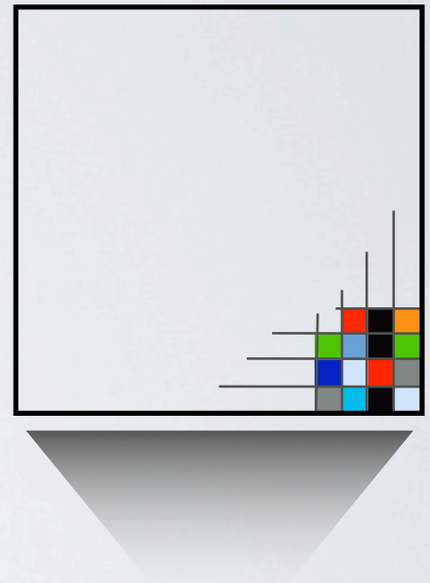

Simulator supertile

- Tiles are simulated by supertiles
- For each assembly sequence in the simulated tile system, there is an assembly sequence in the simulator, and vice-versa

Simulation definition

Universal (simulator) tile set

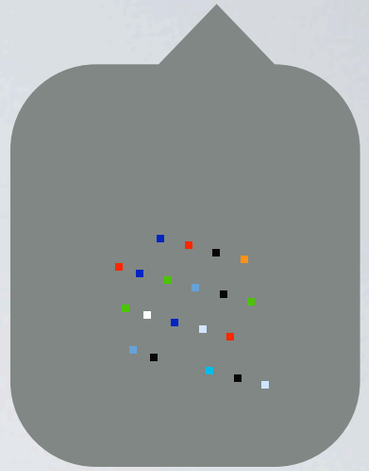

Temperature = 2

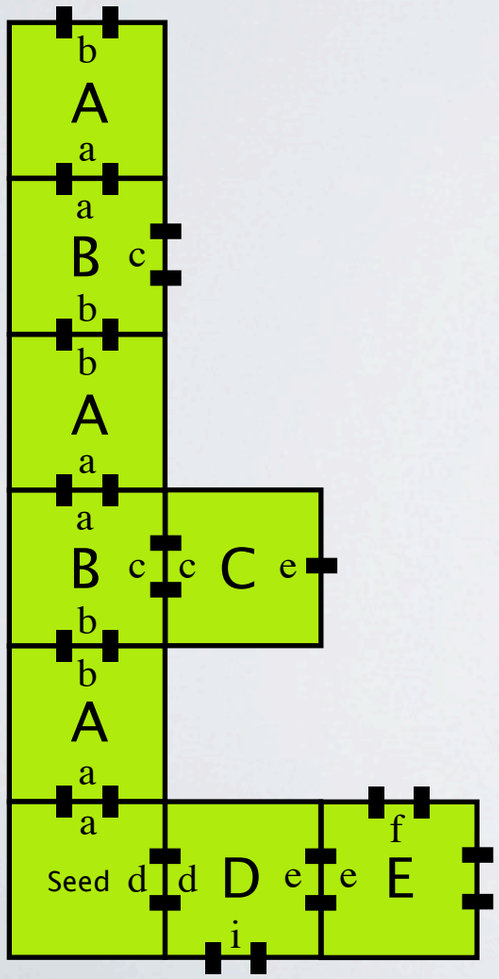

Preassembled seed structure (encodes simulated TAS)

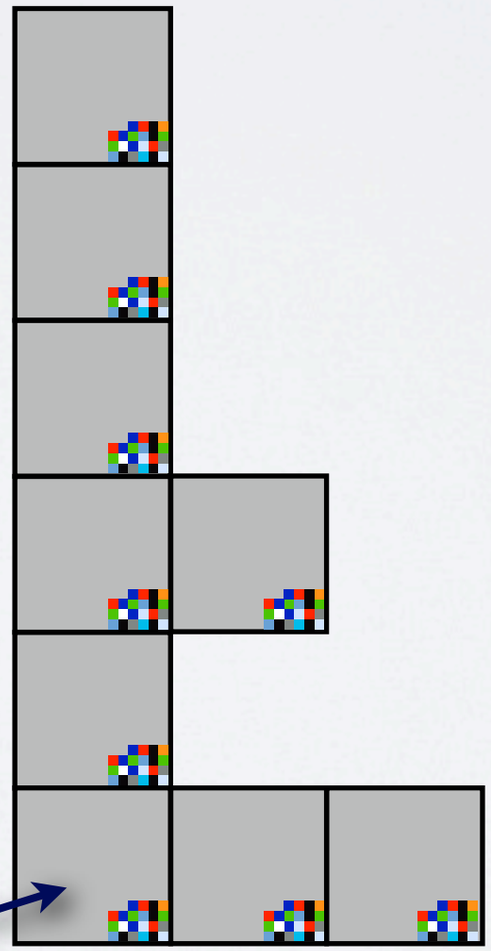

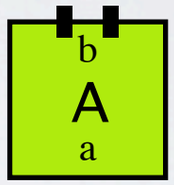

Simulated tile

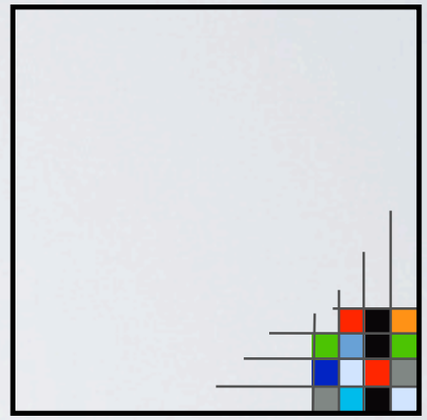

Simulator supertile

- Tiles are simulated by supertiles
- For each assembly sequence in the simulated tile system, there is an assembly sequence in the simulator, and vice-versa

Simulation definition

Universal (simulator) tile set

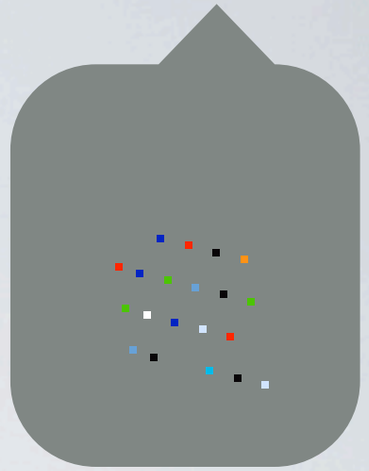

Temperature = 2

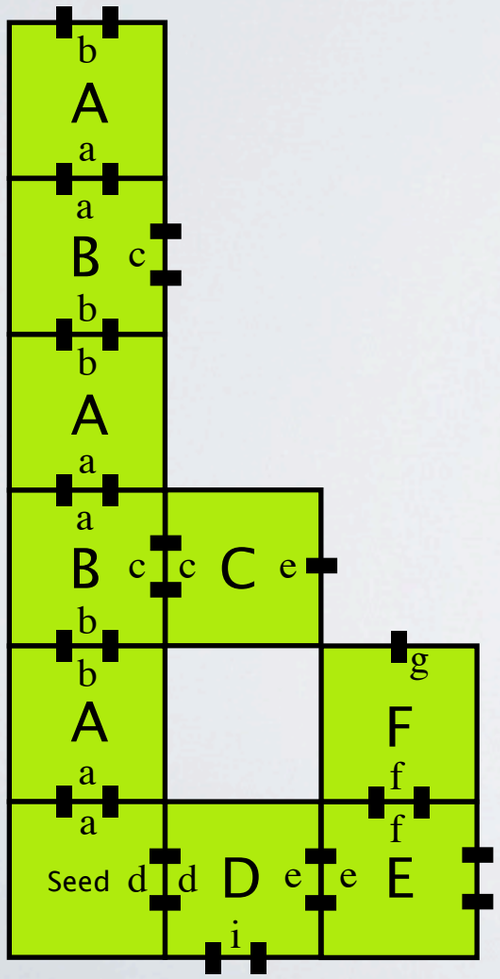

Preassembled seed structure (encodes simulated TAS)

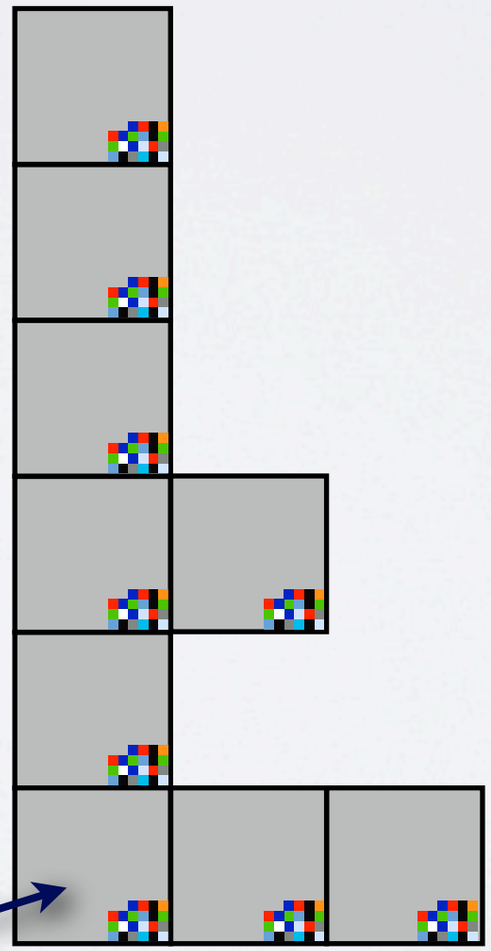

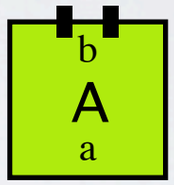

Simulated tile

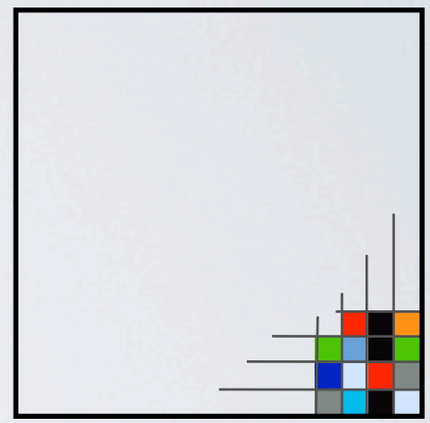

Simulator supertile

- Tiles are simulated by supertiles
- For each assembly sequence in the simulated tile system, there is an assembly sequence in the simulator, and vice-versa

Simulation definition

Universal (simulator) tile set

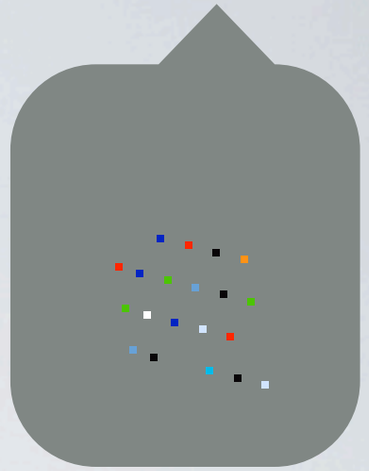

Temperature = 2

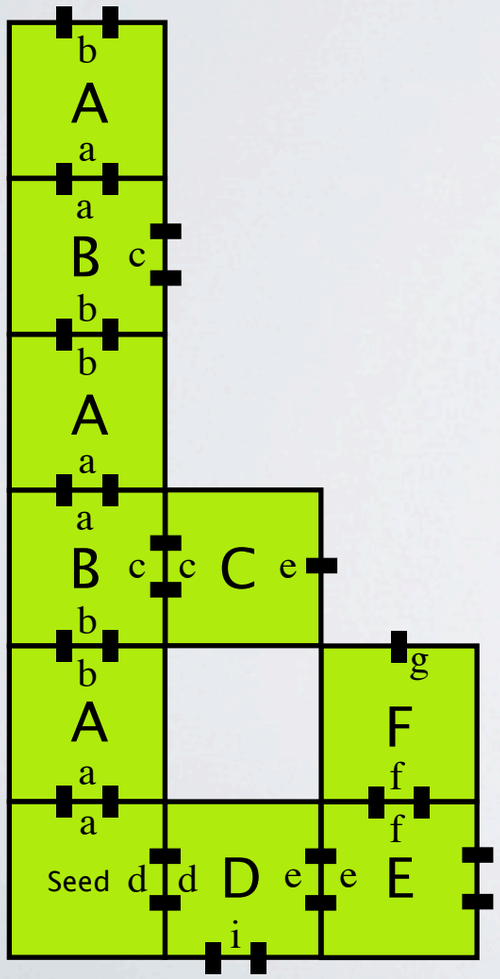

Preassembled seed structure (encodes simulated TAS)

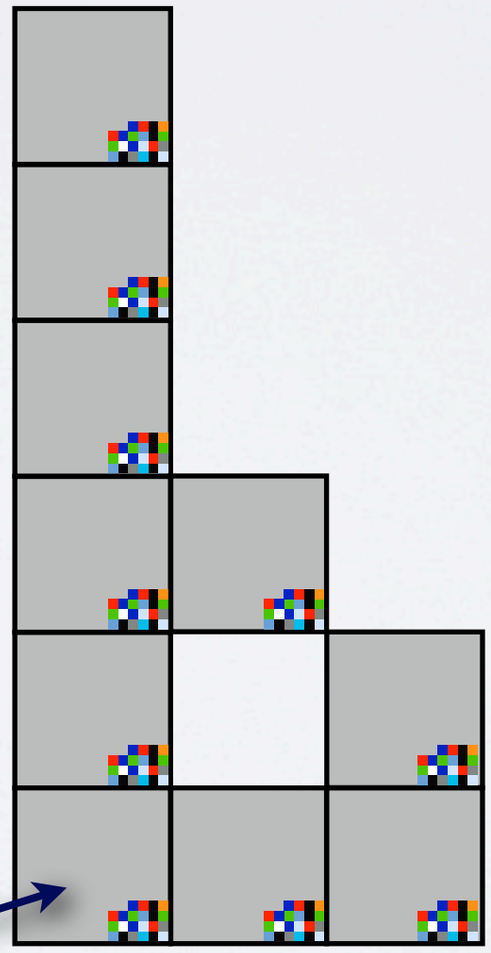

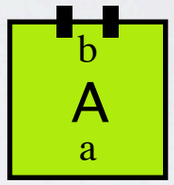

Simulated tile

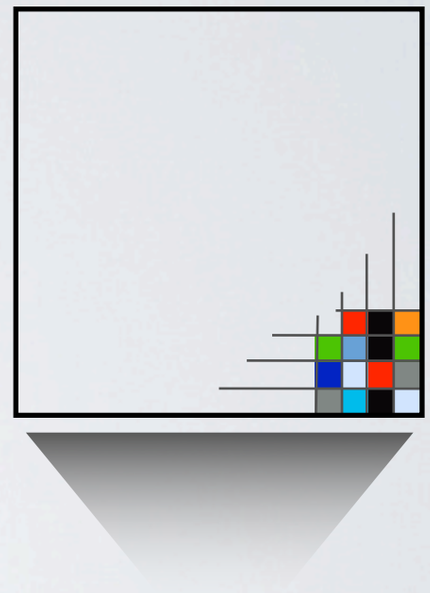

Simulator supertile

- Tiles are simulated by supertiles
- For each assembly sequence in the simulated tile system, there is an assembly sequence in the simulator, and vice-versa

Simulation definition

Universal (simulator) tile set

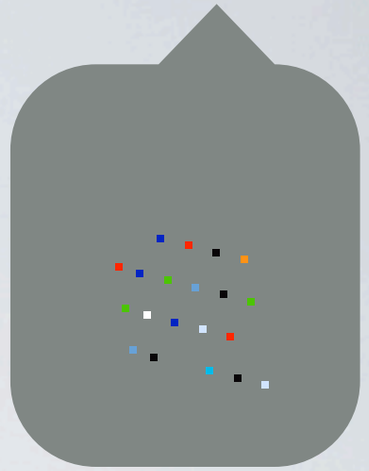

Temperature = 2

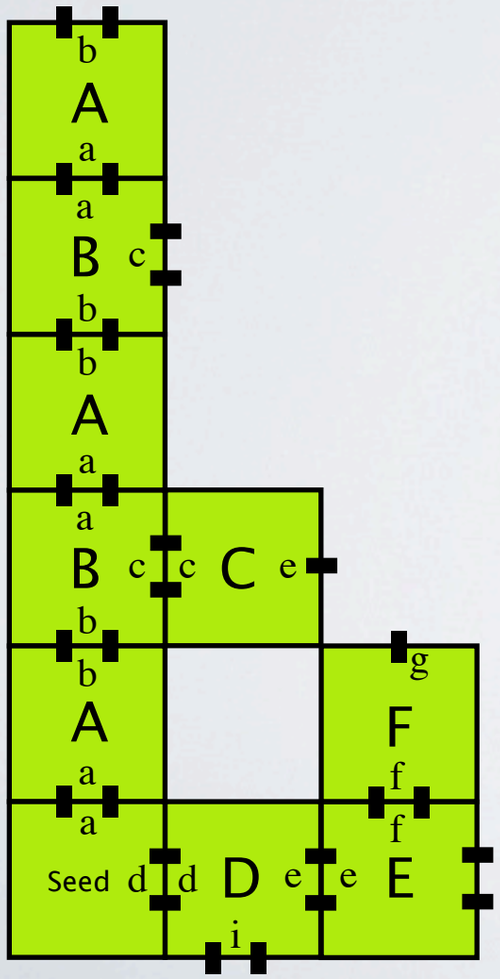

Preassembled seed structure (encodes simulated TAS)

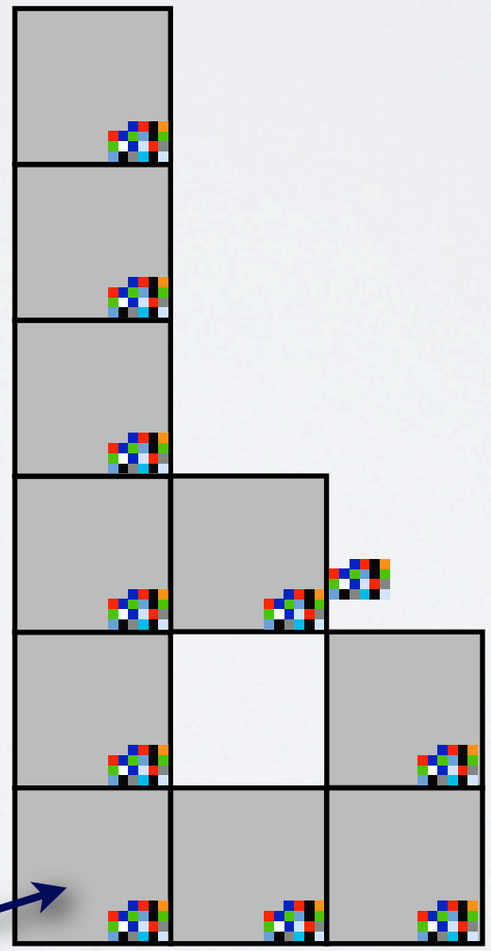

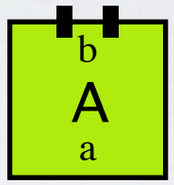

Simulated tile

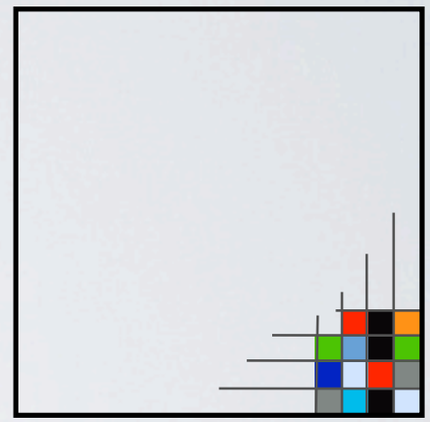

Simulator supertile

- Tiles are simulated by supertiles
- For each assembly sequence in the simulated tile system, there is an assembly sequence in the simulator, and vice-versa

Simulation definition

Universal (simulator) tile set

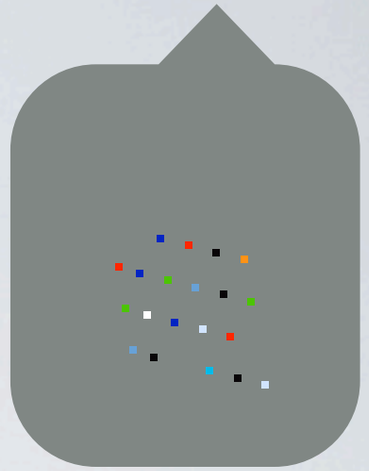

Temperature = 2

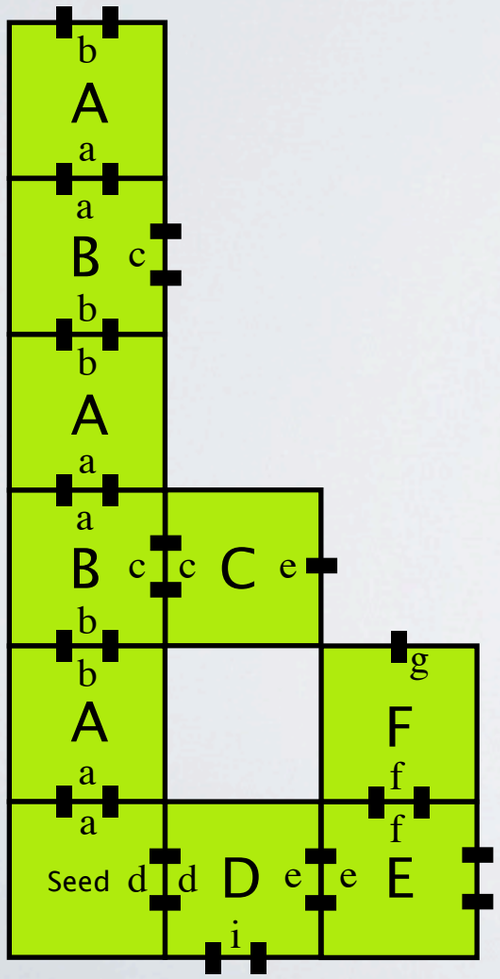

Preassembled seed structure (encodes simulated TAS)

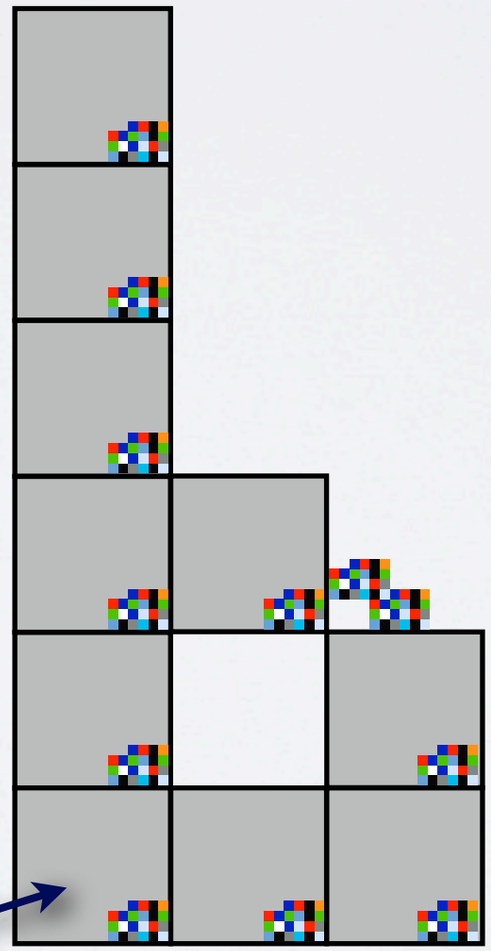

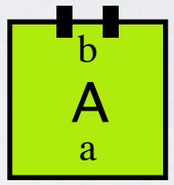

Simulated tile

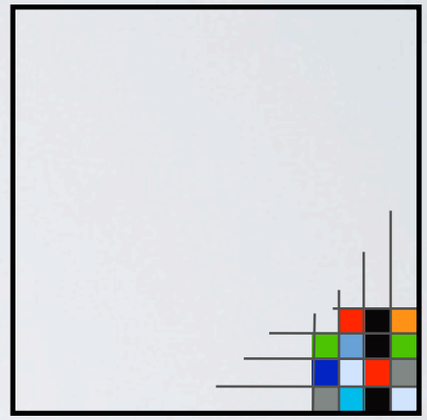

Simulator supertile

- Tiles are simulated by supertiles
- For each assembly sequence in the simulated tile system, there is an assembly sequence in the simulator, and vice-versa

Simulation definition

Universal (simulator) tile set

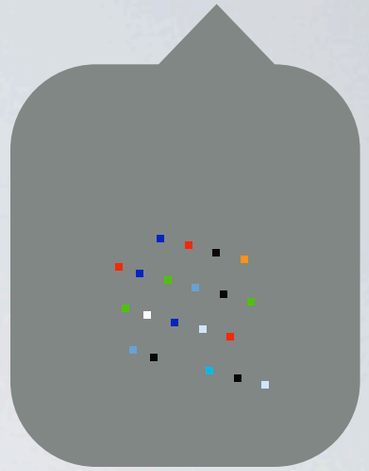

Temperature = 2

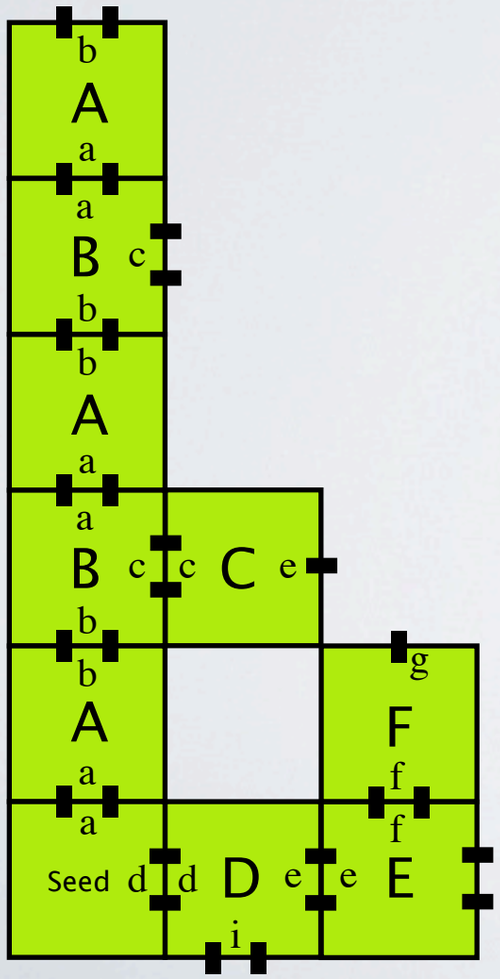

Preassembled seed structure (encodes simulated TAS)

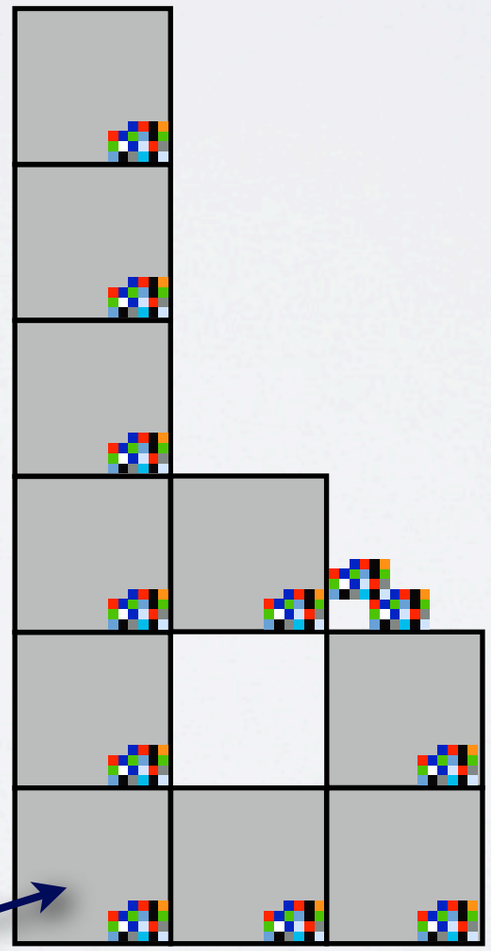

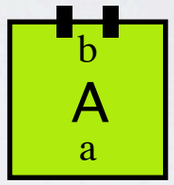

Simulated tile

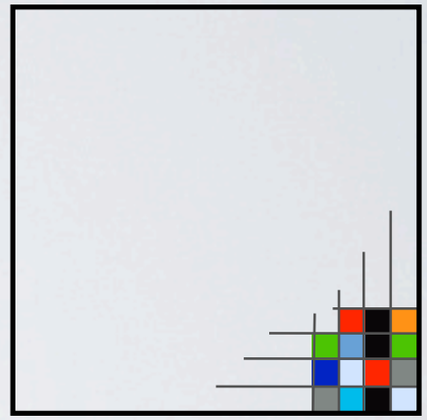

Simulator supertile

- Tiles are simulated by supertiles
- For each assembly sequence in the simulated tile system, there is an assembly sequence in the simulator, and vice-versa

etc.

Simulation definition

Ignoring *m* x *m* scaling, dynamics are equivalent in the simulated system and simulator

Universal (simulator) tile set

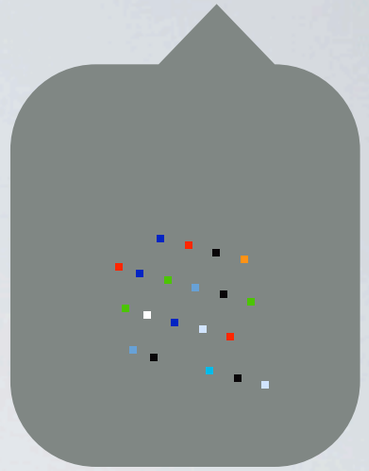

Temperature = 2

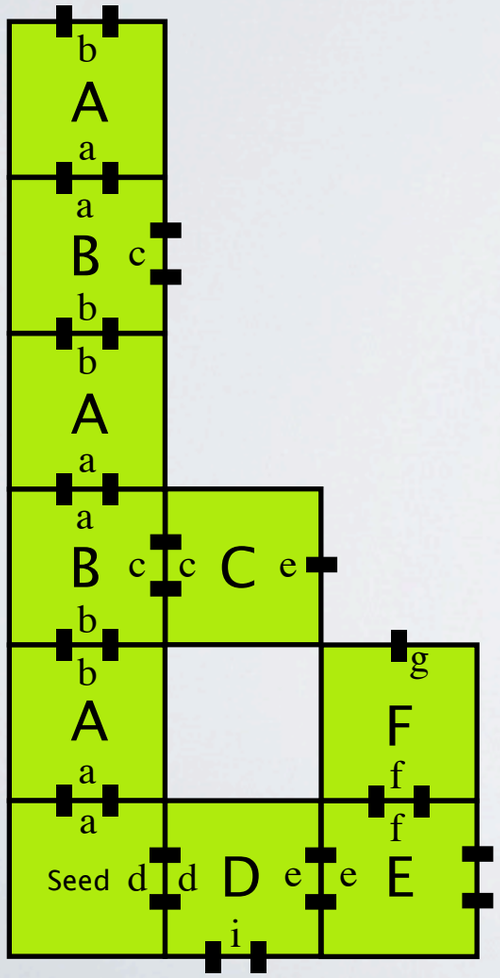

Preassembled seed structure (encodes simulated TAS)

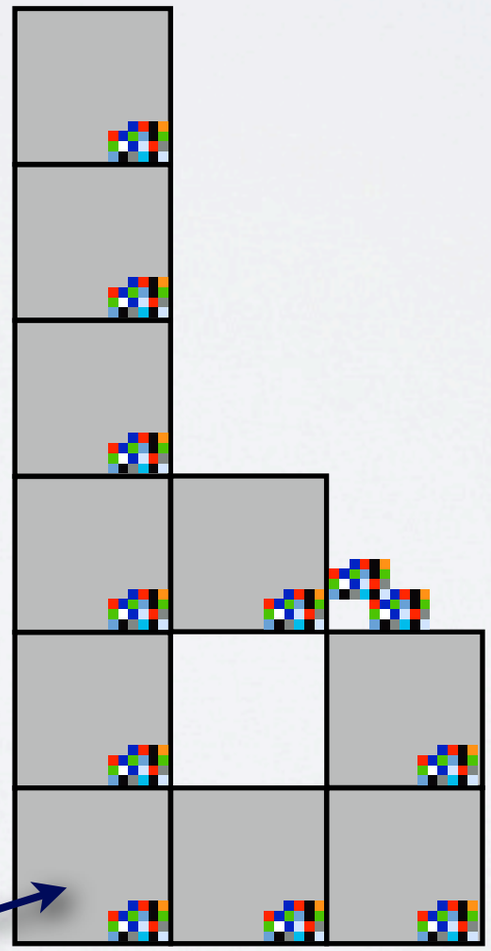

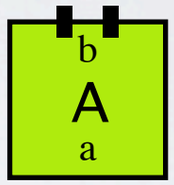

Simulated tile

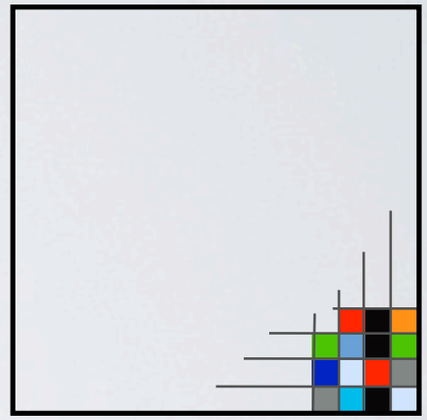

Simulator supertile

- Tiles are simulated by supertiles
- For each assembly sequence in the simulated tile system, there is an assembly sequence in the simulator, and vice-versa

etc.

Simulation definition

- We want a definition of simulation that captures the notion of one Tile Assembly System simulating the “behaviour” of another
- $\mathcal{T}$ is a (any) simulated tile assembly system,
  - $\mathcal{T}$ = (tileset T, seed assembly σ, temperature τ)
- Tile assembly system $\mathcal{U}_{\mathcal{T}}$ = (U, $\sigma_{\mathcal{T}}$, 2) simulates $\mathcal{T}$ if:
  - Tiles from T are simulated by m x m supertiles in $\mathcal{U}_{\mathcal{T}}$, i.e., a representation function R maps supertiles in assemblies of $\mathcal{U}_{\mathcal{T}}$, to tiles in T. Oh, and R is “clean”.
  - The producible assemblies in $\mathcal{U}_{\mathcal{T}}$ represent exactly the producible assemblies in $\mathcal{T}$.
  - Ignoring m x m scaling, dynamics are equivalent in $\mathcal{U}_{\mathcal{T}}$ & $\mathcal{T}$.

Is the abstract tile assembly model intrinsically universal?

Yes!

Theorem: There is a single universal tile set *U* that simulates *any* tile assembly system

Doty, Lutz, Patitz, Schweller, Summers, Woods. FOCS 2012

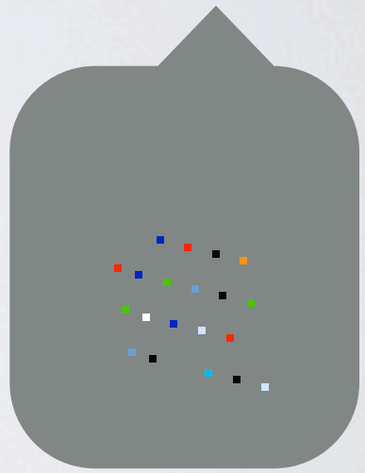

Universal tile set

seed supertile

Tiles from the universal tile set U
are arranged so that they encode
some simulated tile assembly system $\mathcal{T}$

Preassembled
seed supertile

Superside

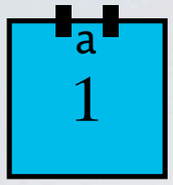

Encoded **glue** of **this** superside (e.g. “a”)

Encoding of the entire simulated **tile assembly system** written down using tiles from the simulator *U*

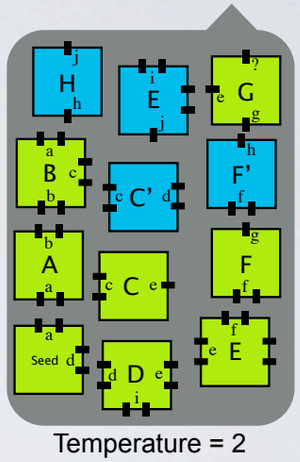

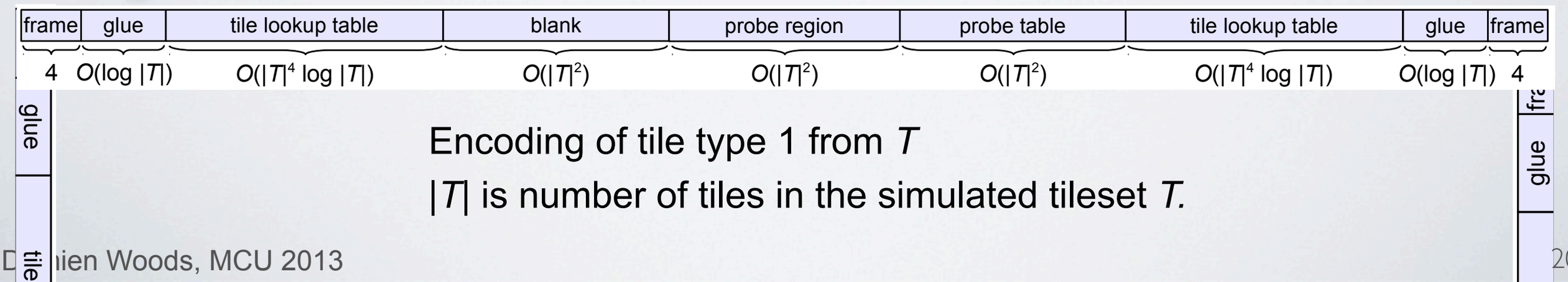

Encoding of tile type 1 from *T*

|*T*| is number of tiles in the simulated tileset *T.*

One-sided binding with a single strength-τ south superside

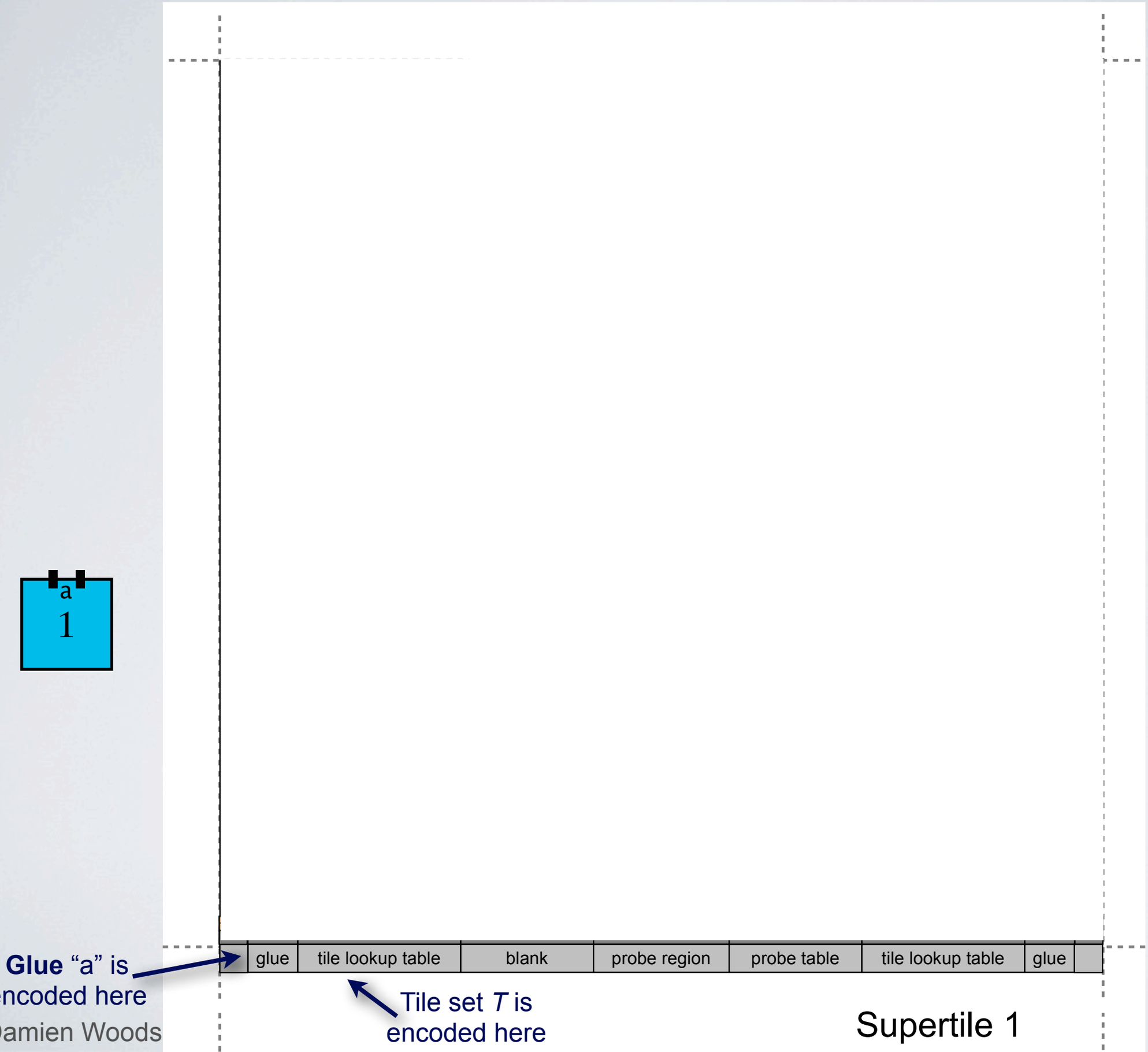

One-sided binding with a single strength-τ south superside

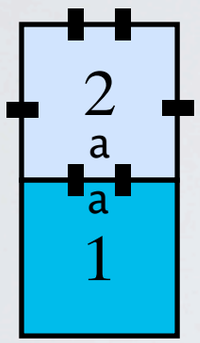

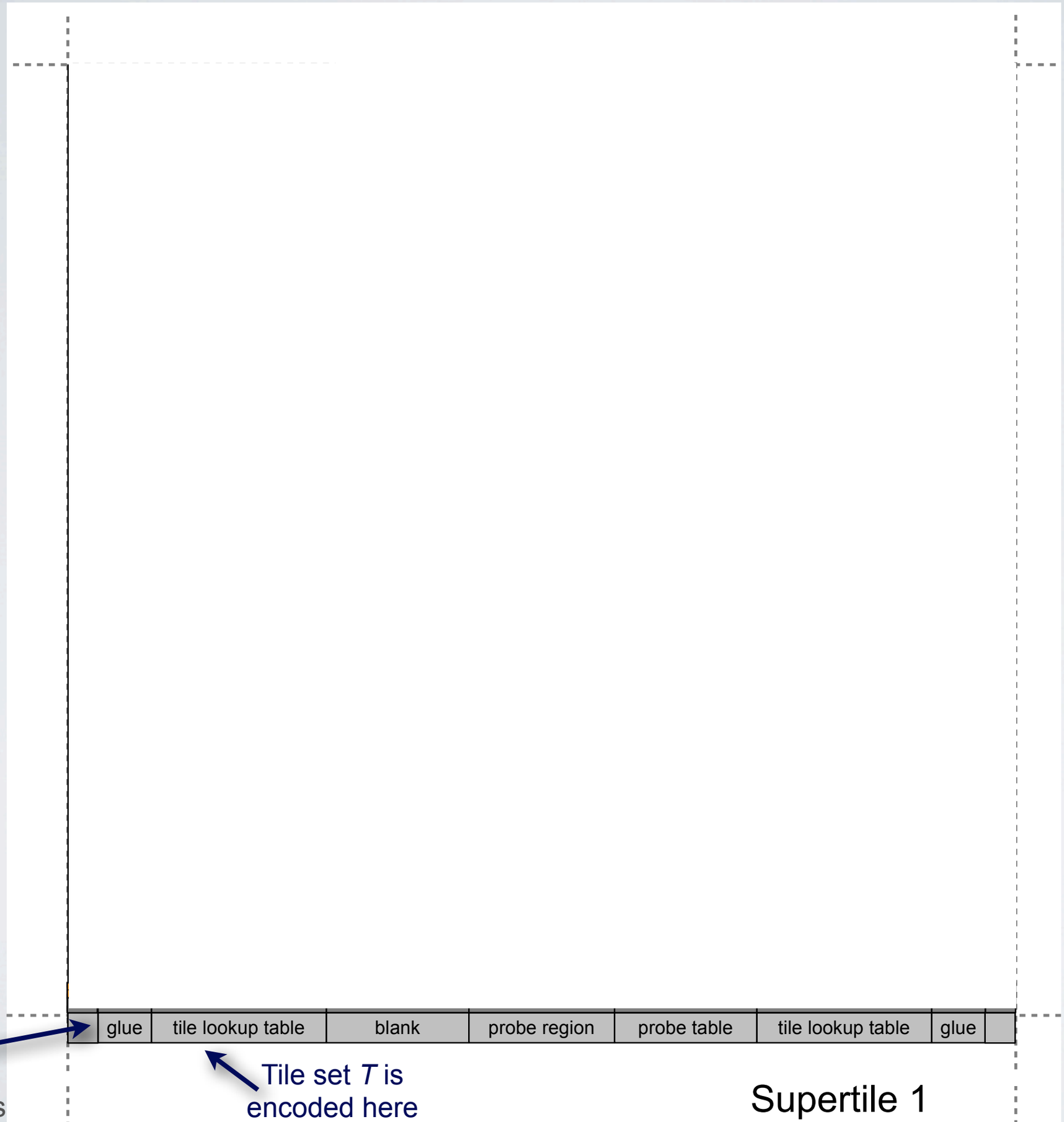

One-sided binding with a single strength-τ south superside

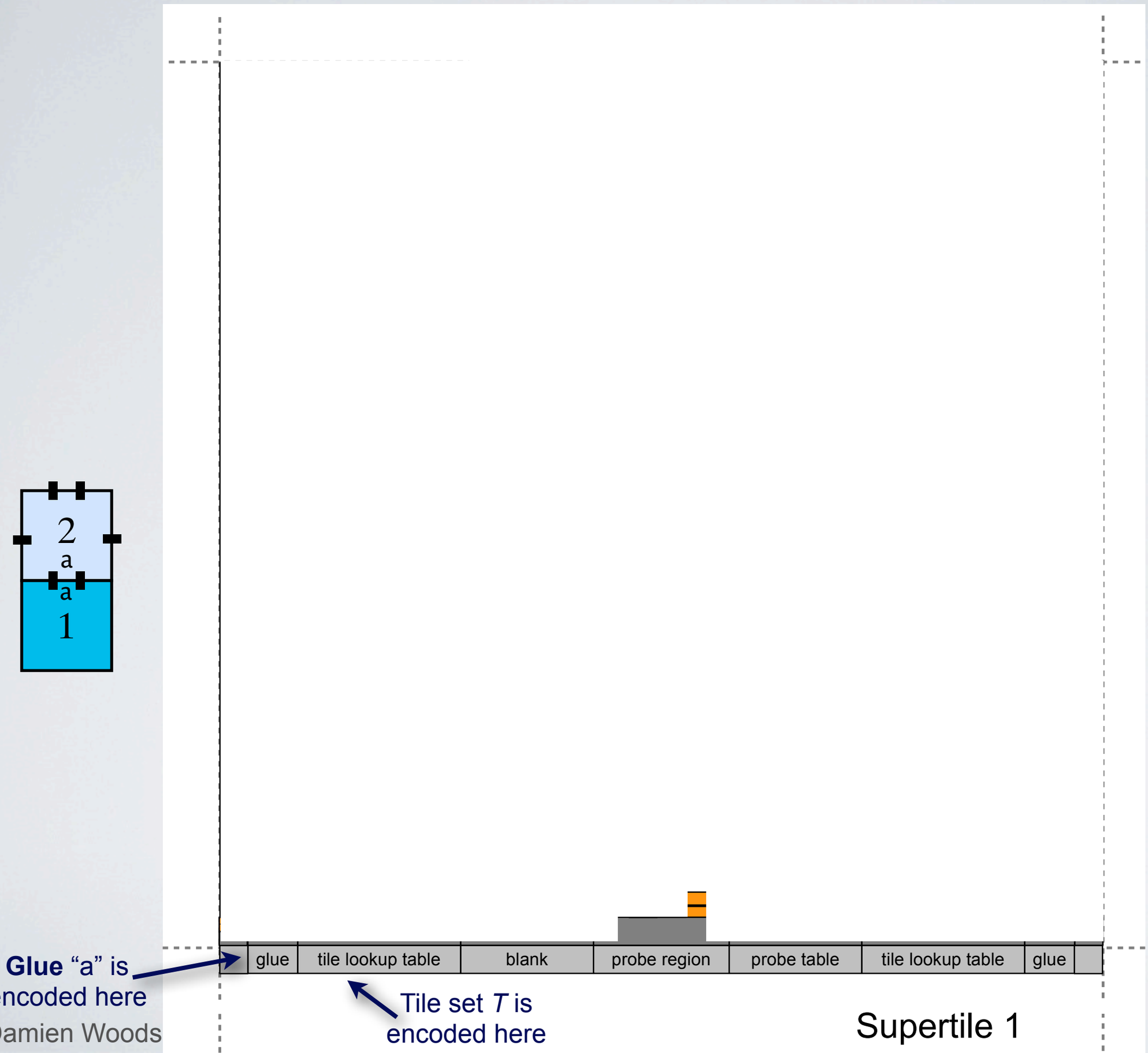

One-sided binding with a single strength-τ south superside

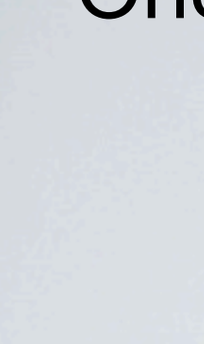

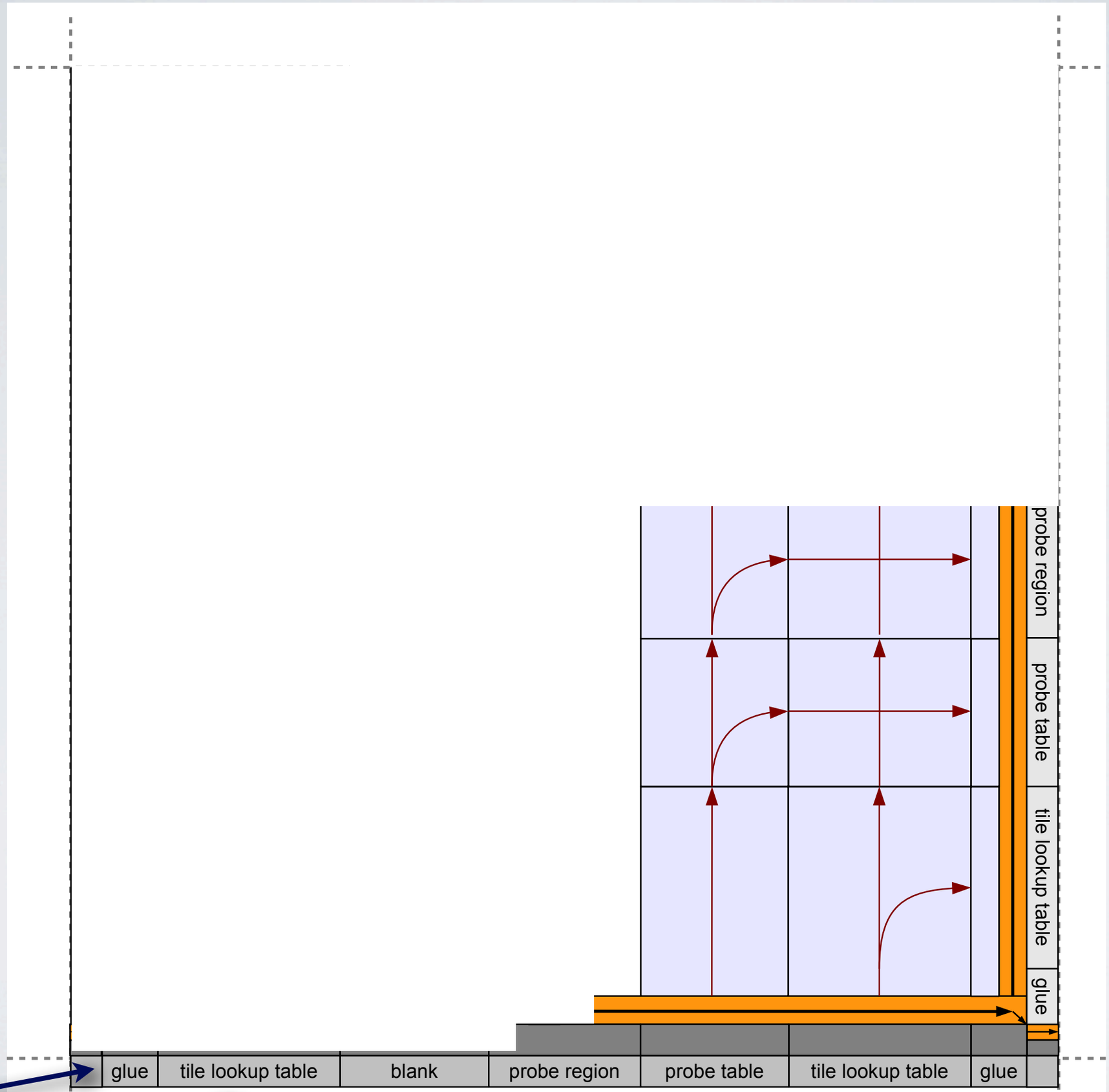

Glue “a” is encoded here

Tile set *T* is encoded here

Supertile 1

One-sided binding with a single strength-τ south superside

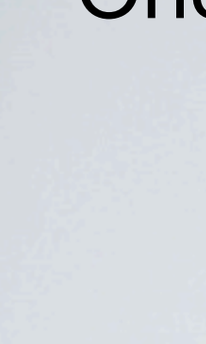

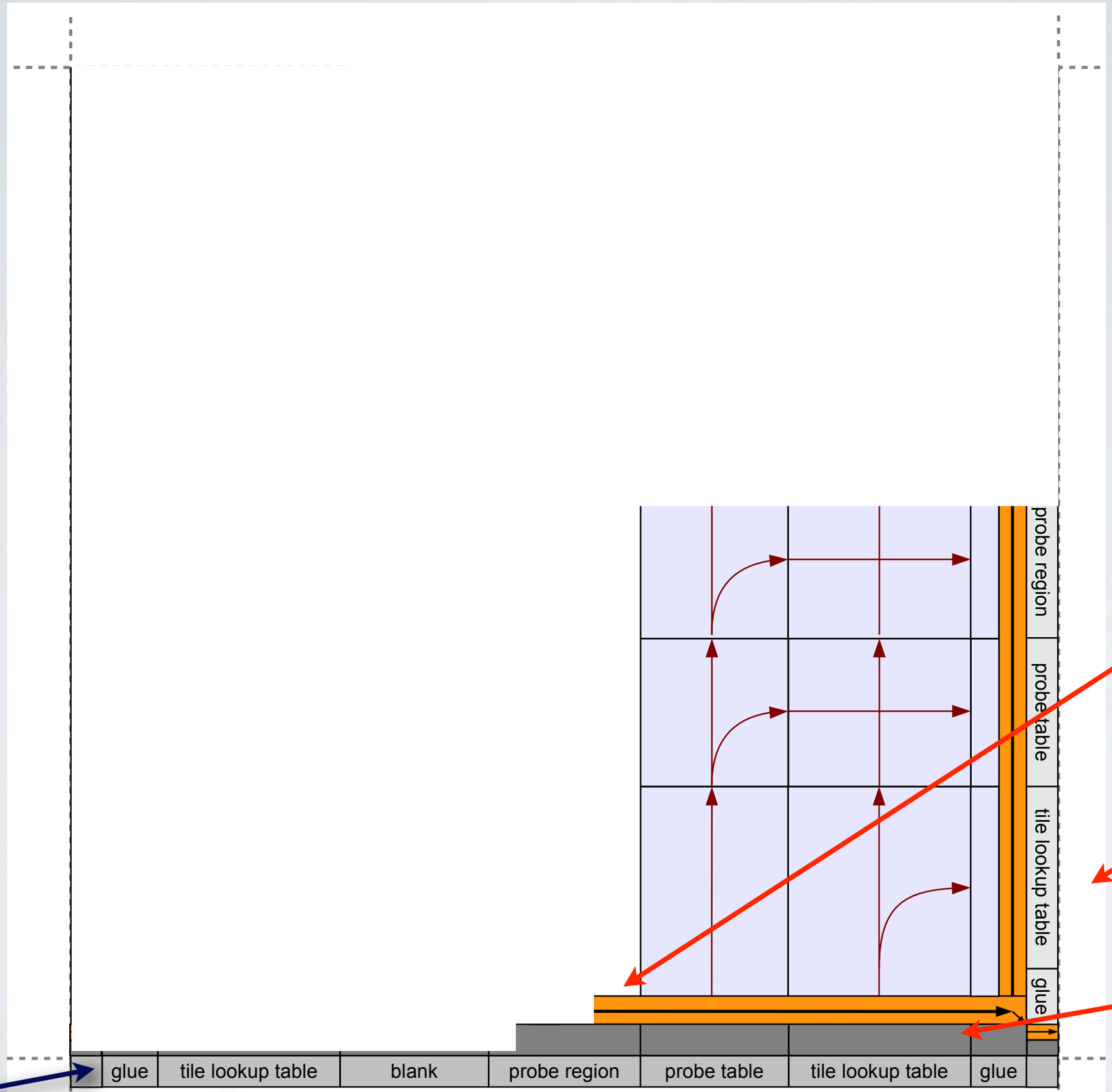

crawler encodes glue of south superside

"Genome" is copied

"Genome" is read

Glue "a" is encoded here

Tile set *T* is encoded here

Supertile 1

One-sided binding with a single strength-τ south superside

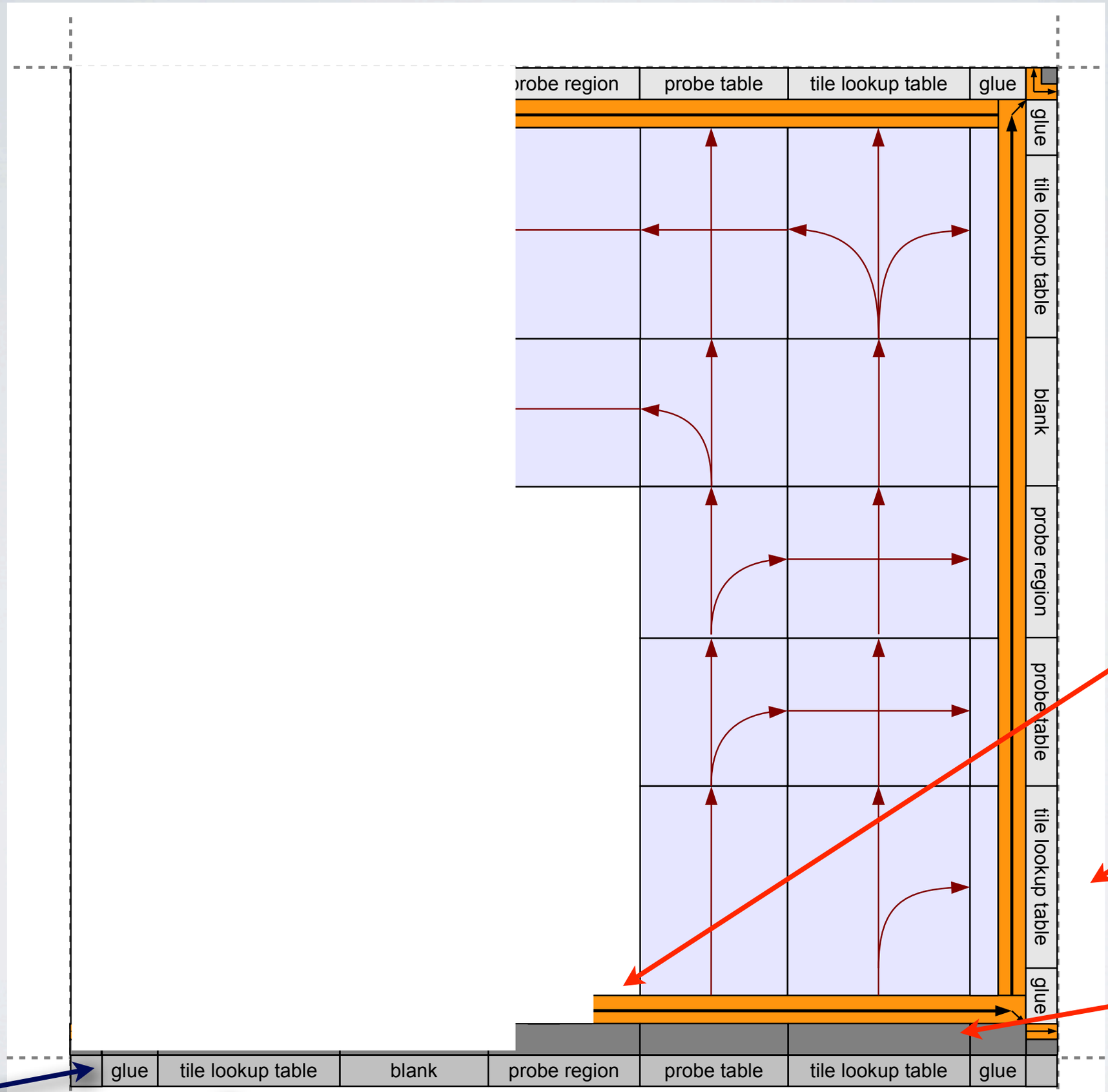

crawler encodes glue of south superside

"Genome" is copied

"Genome" is read

Glue "a" is encoded here

Tile set *T* is encoded here

Supertile 1

One-sided binding with a single strength-τ south superside

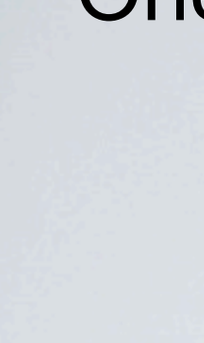

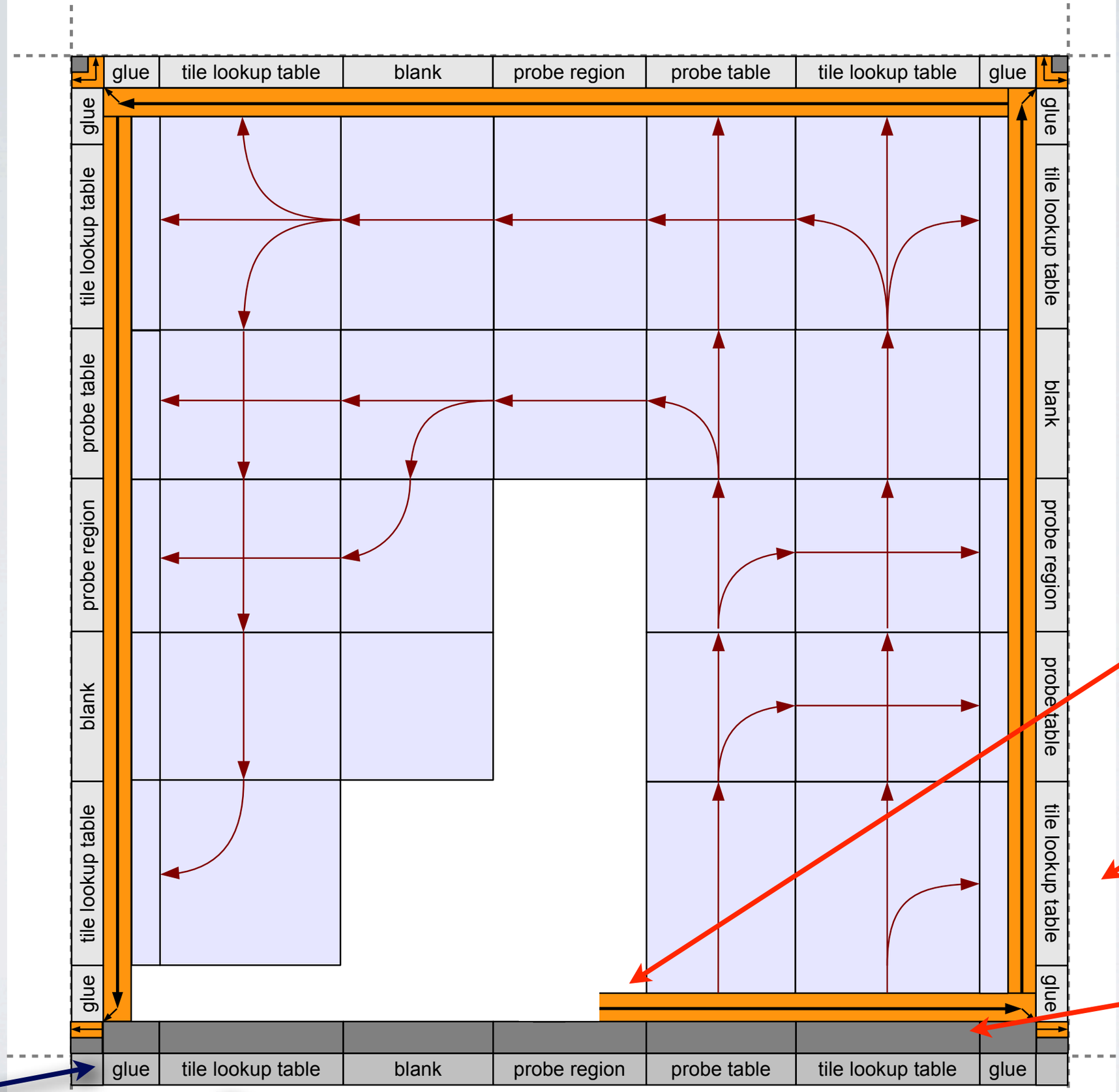

One-sided binding with a single strength-τ south superside

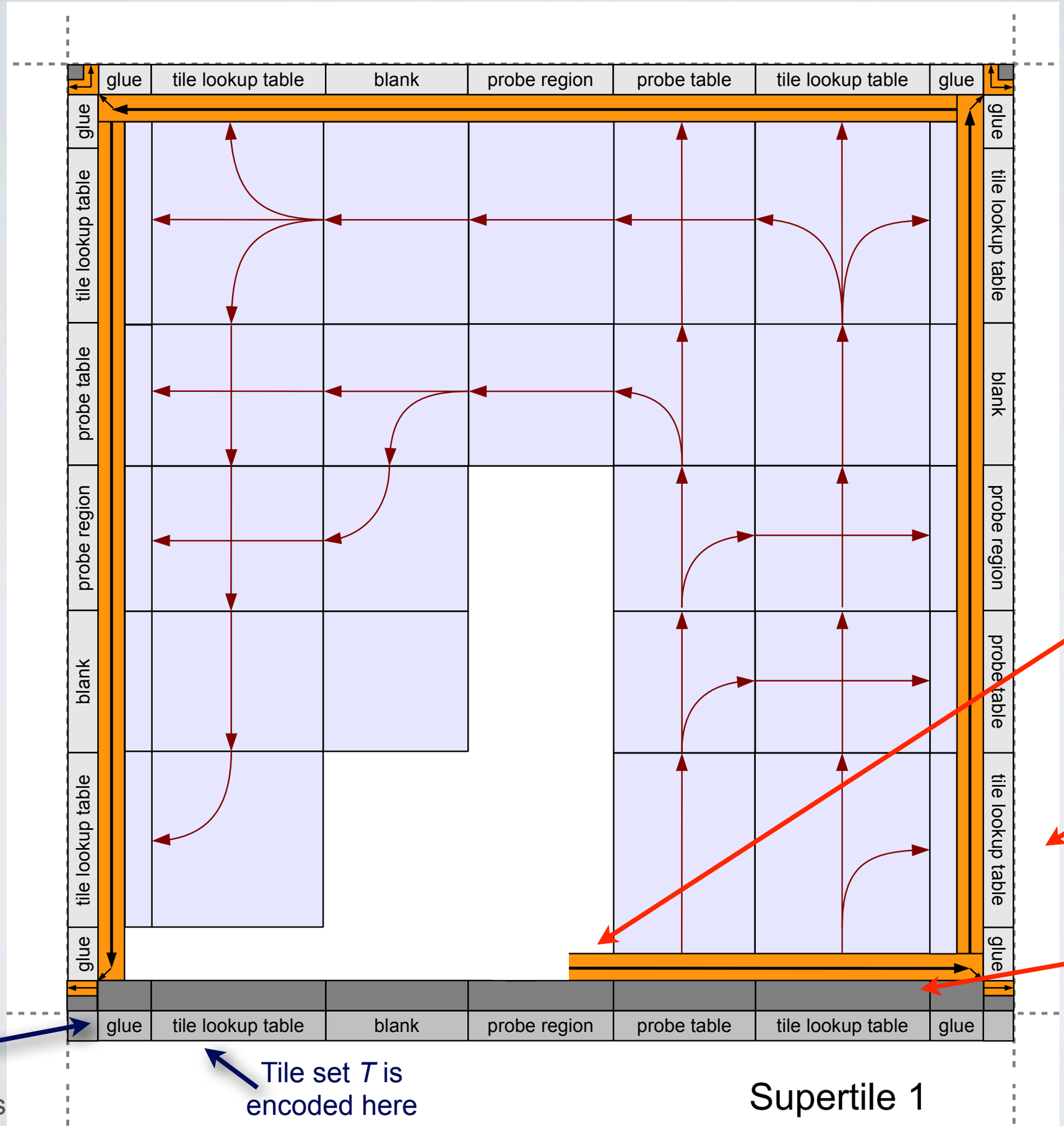

Nondeterminism
Rotations

Crawler doing a tile lookup

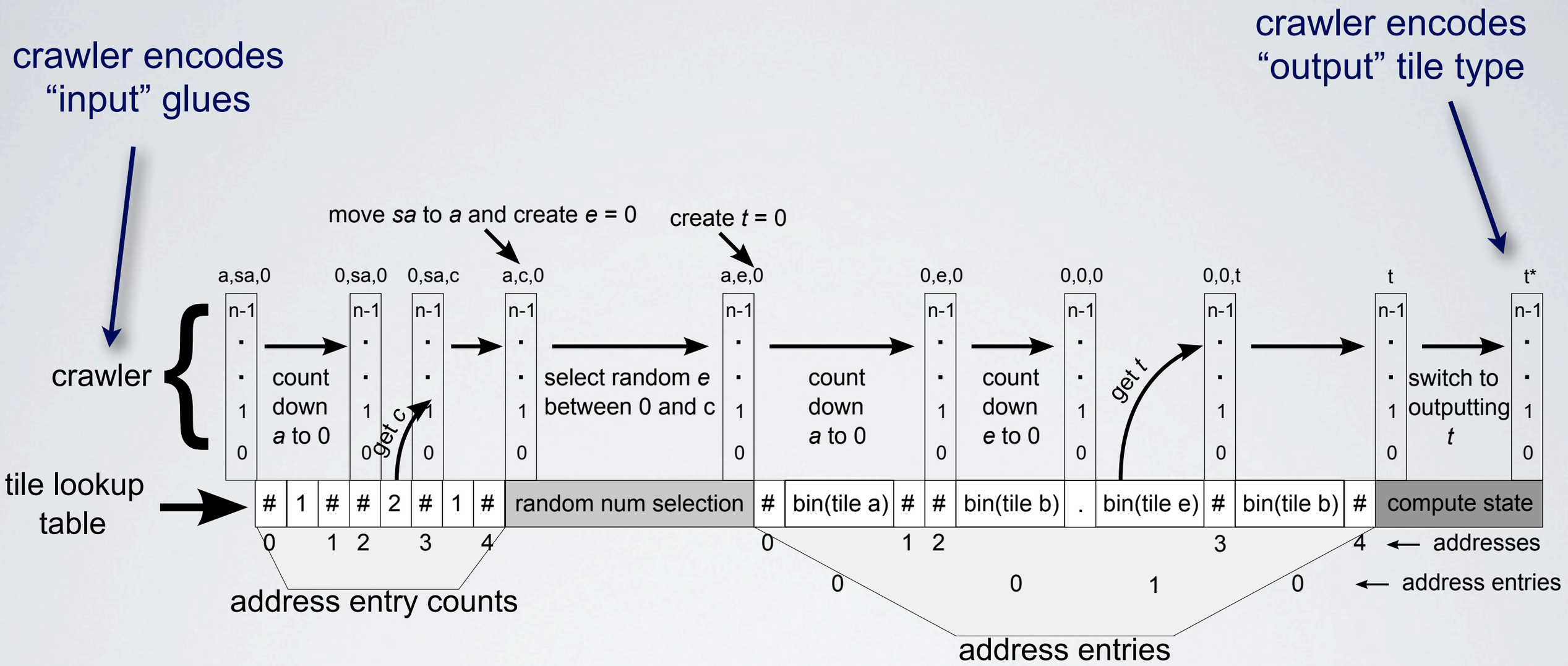

Two-sided binding with adjacent cooperating supersides

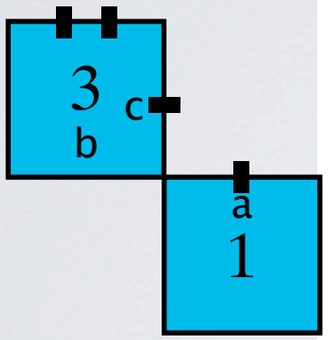

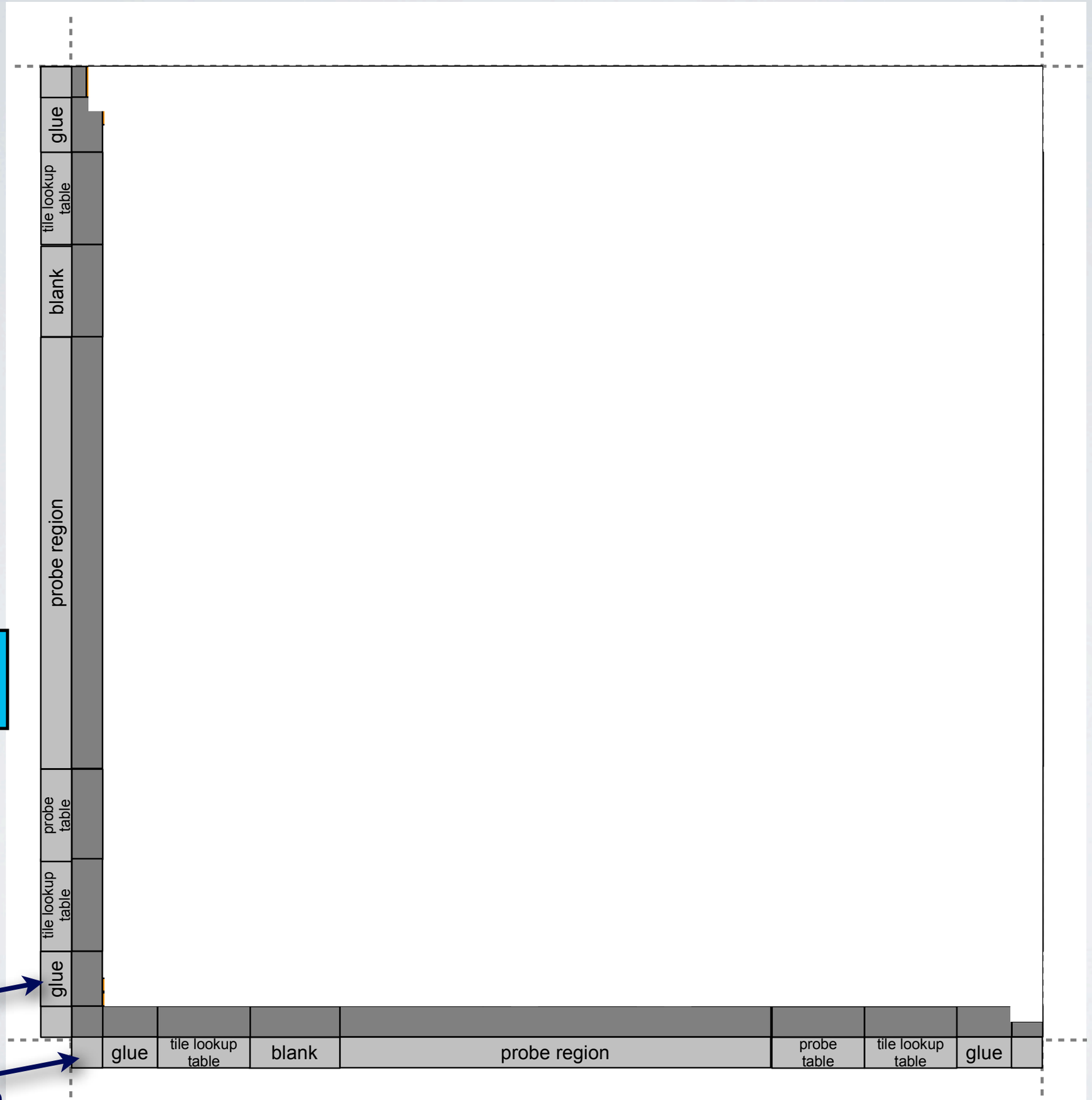

Glue “c” is encoded here

Glue “a” is encoded here

Two-sided binding with adjacent cooperating supersides

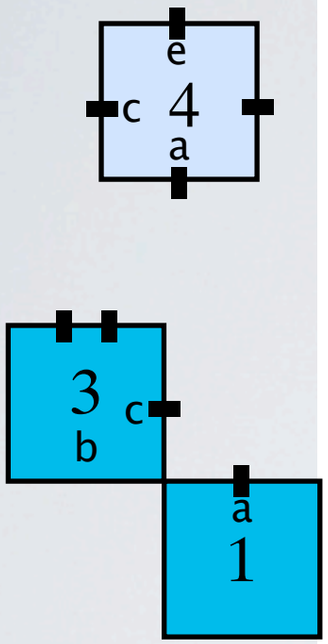

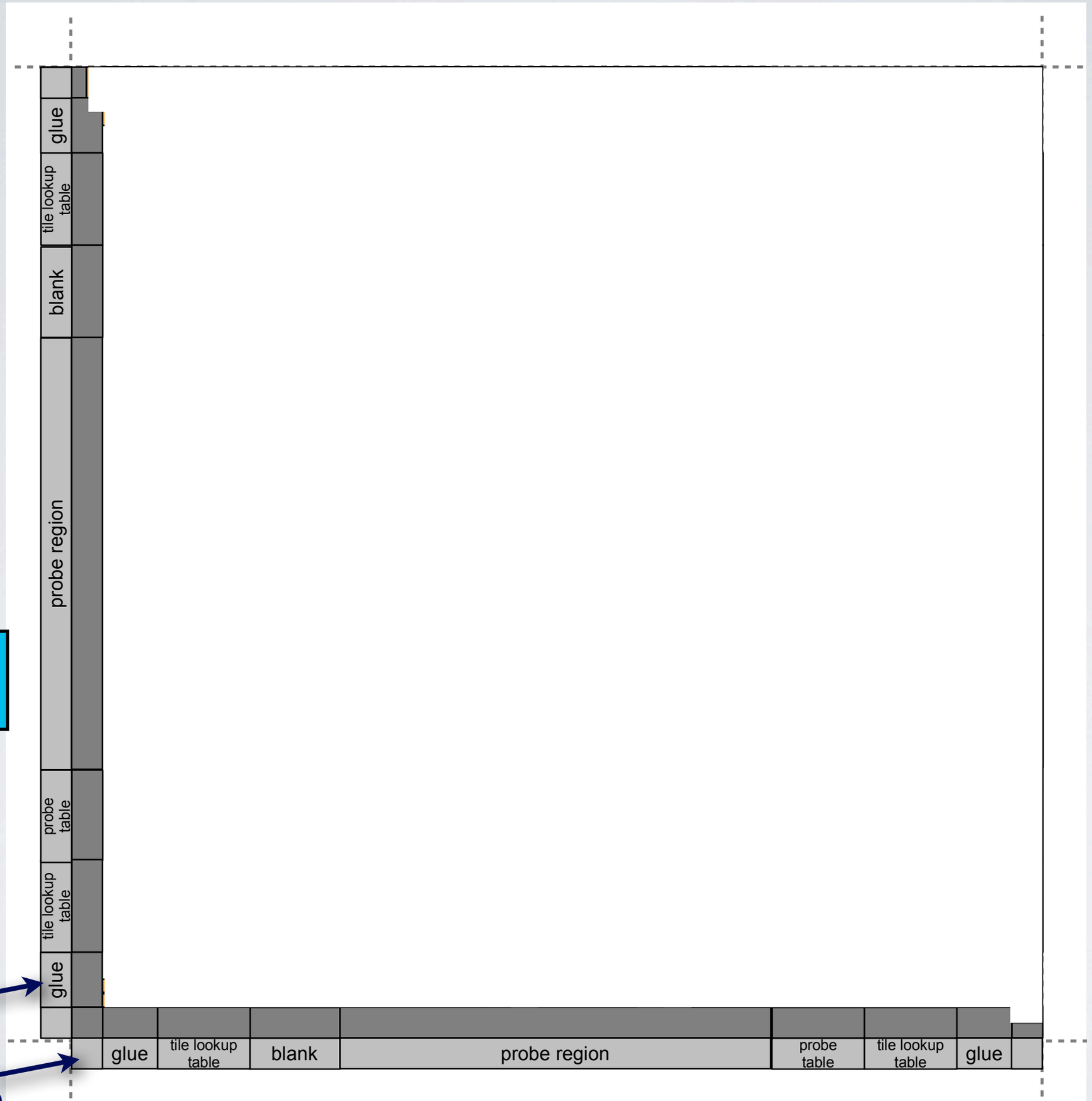

Glue “c” is encoded here

Glue “a” is encoded here

Two-sided binding with adjacent cooperating supersides

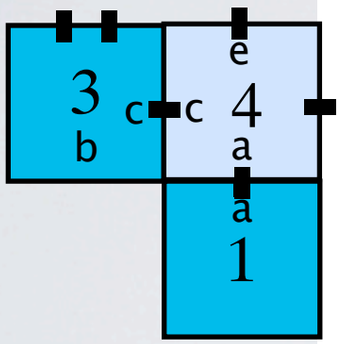

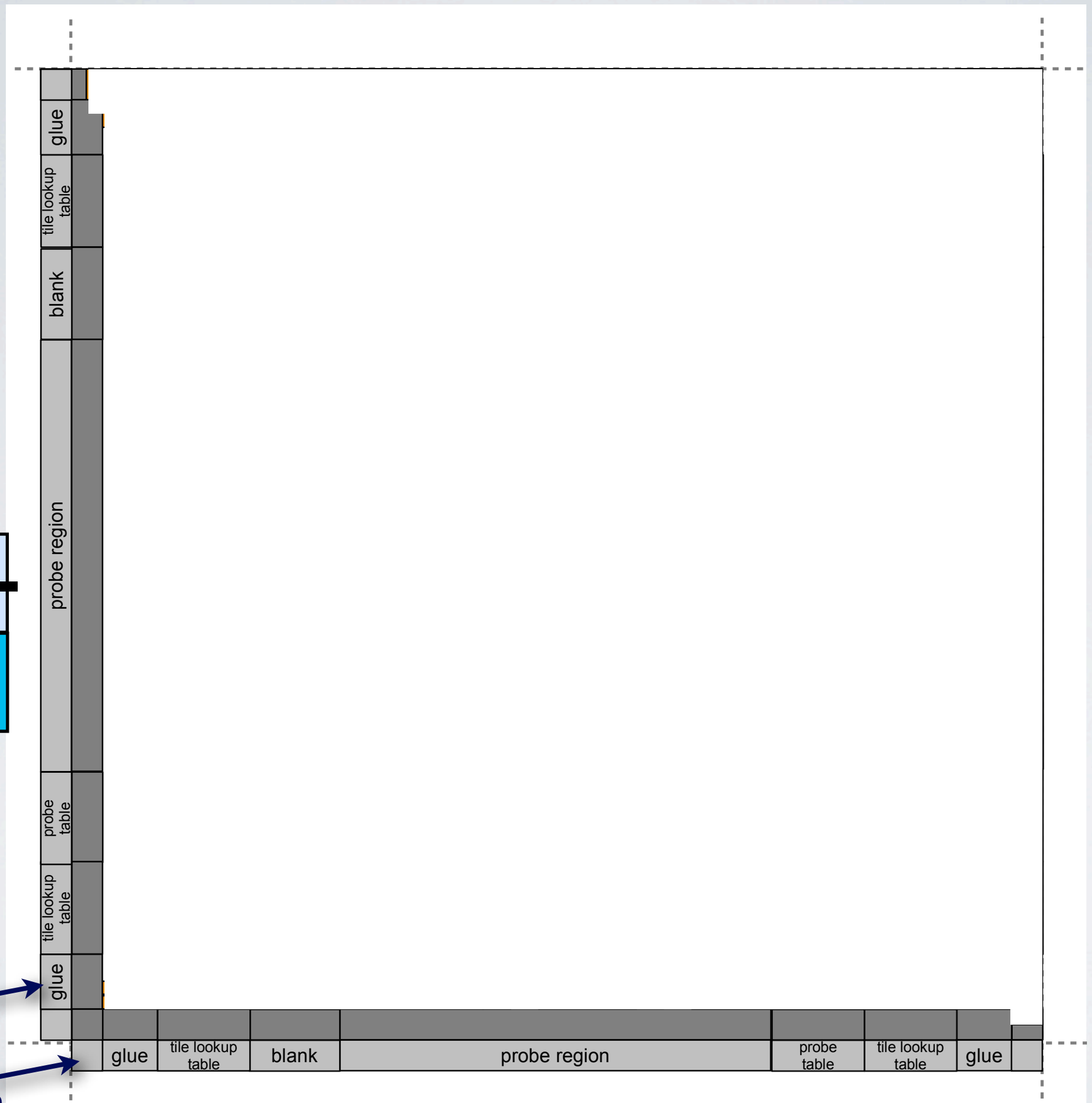

Glue “c” is encoded here

Glue “a” is encoded here

Two-sided binding with adjacent cooperating supersides

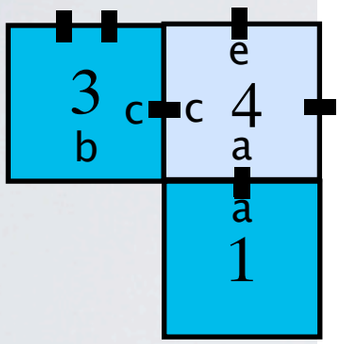

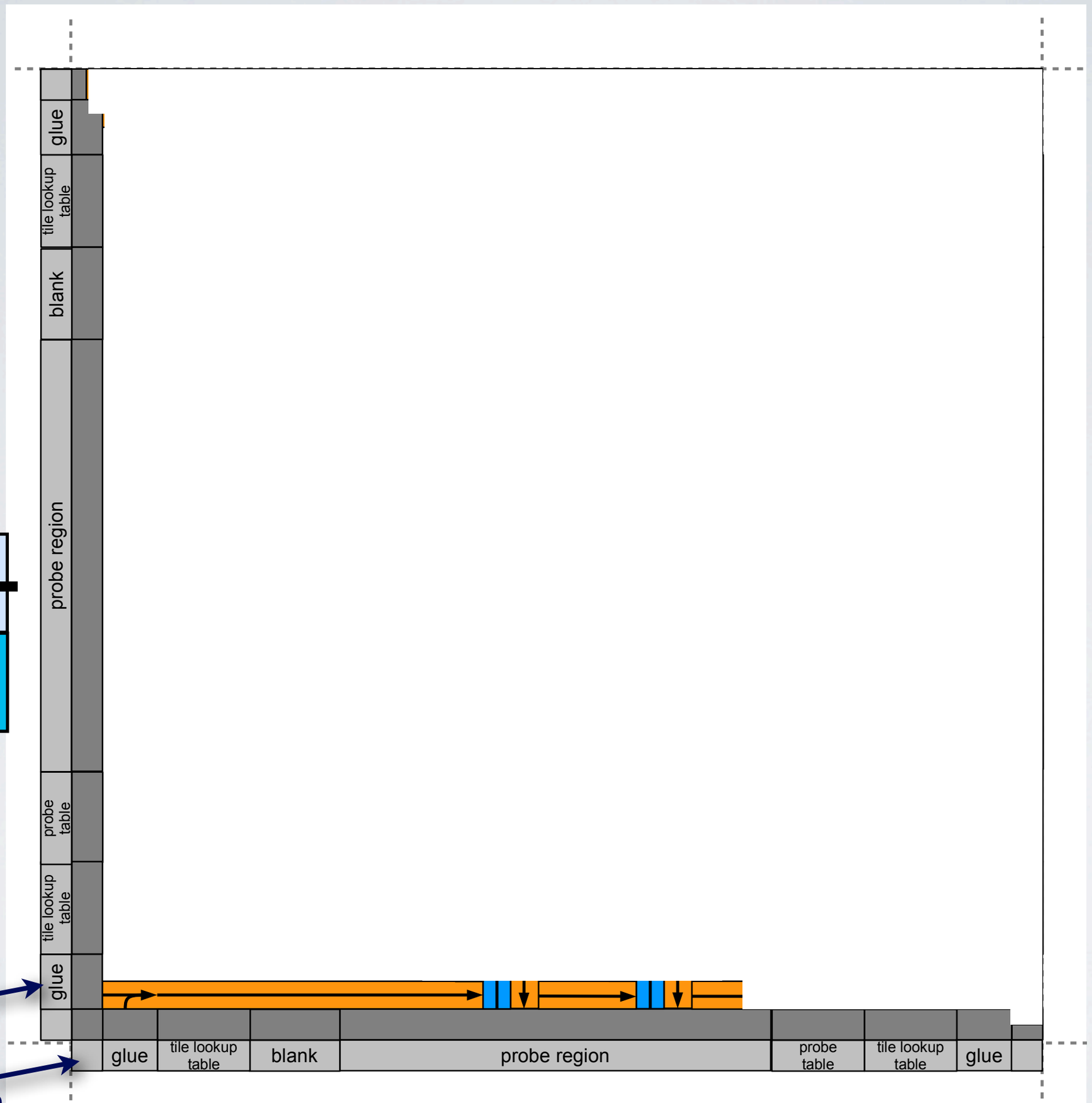

Glue “c” is encoded here

Glue “a” is encoded here

Two-sided binding with adjacent cooperating supersides

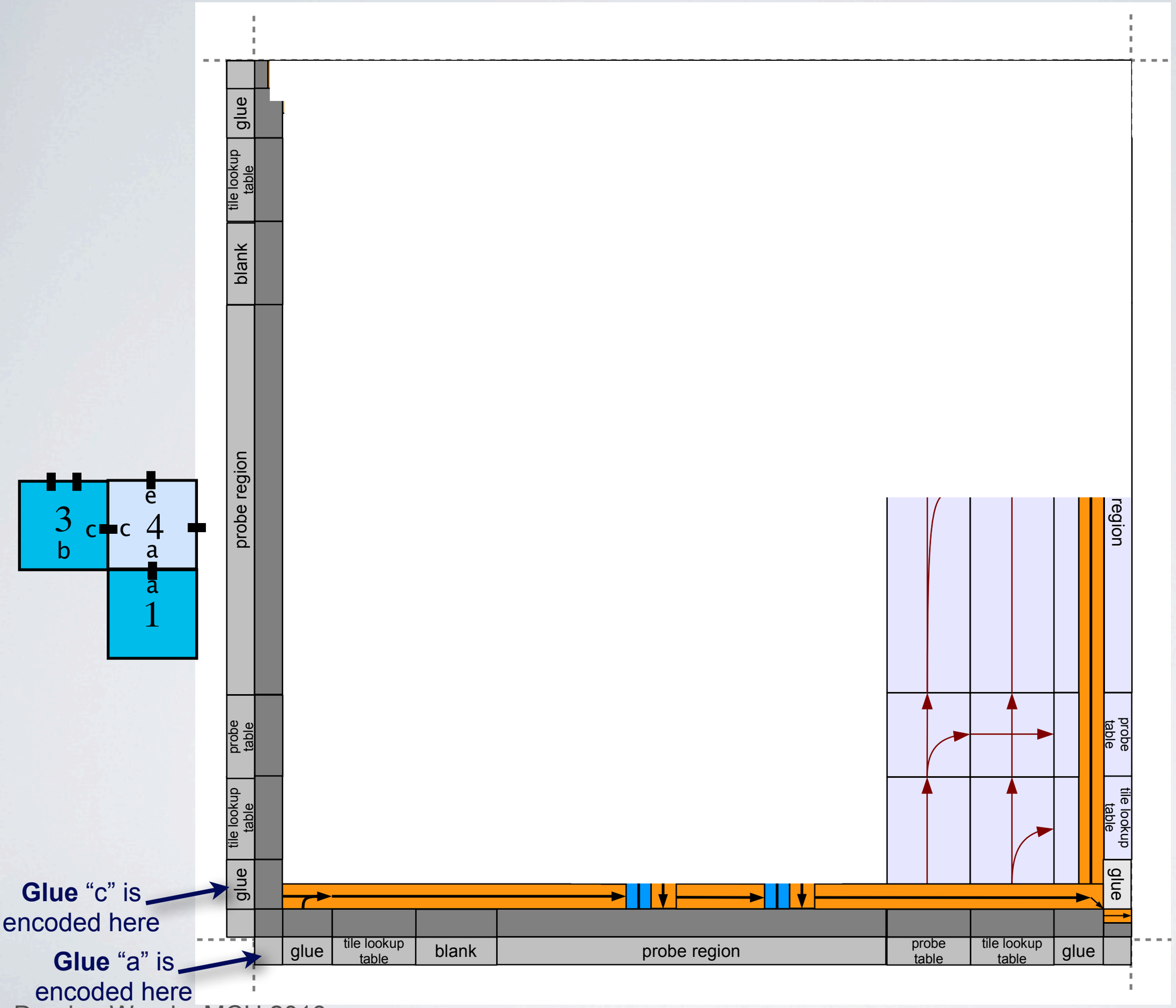

Two-sided binding with adjacent cooperating supersides

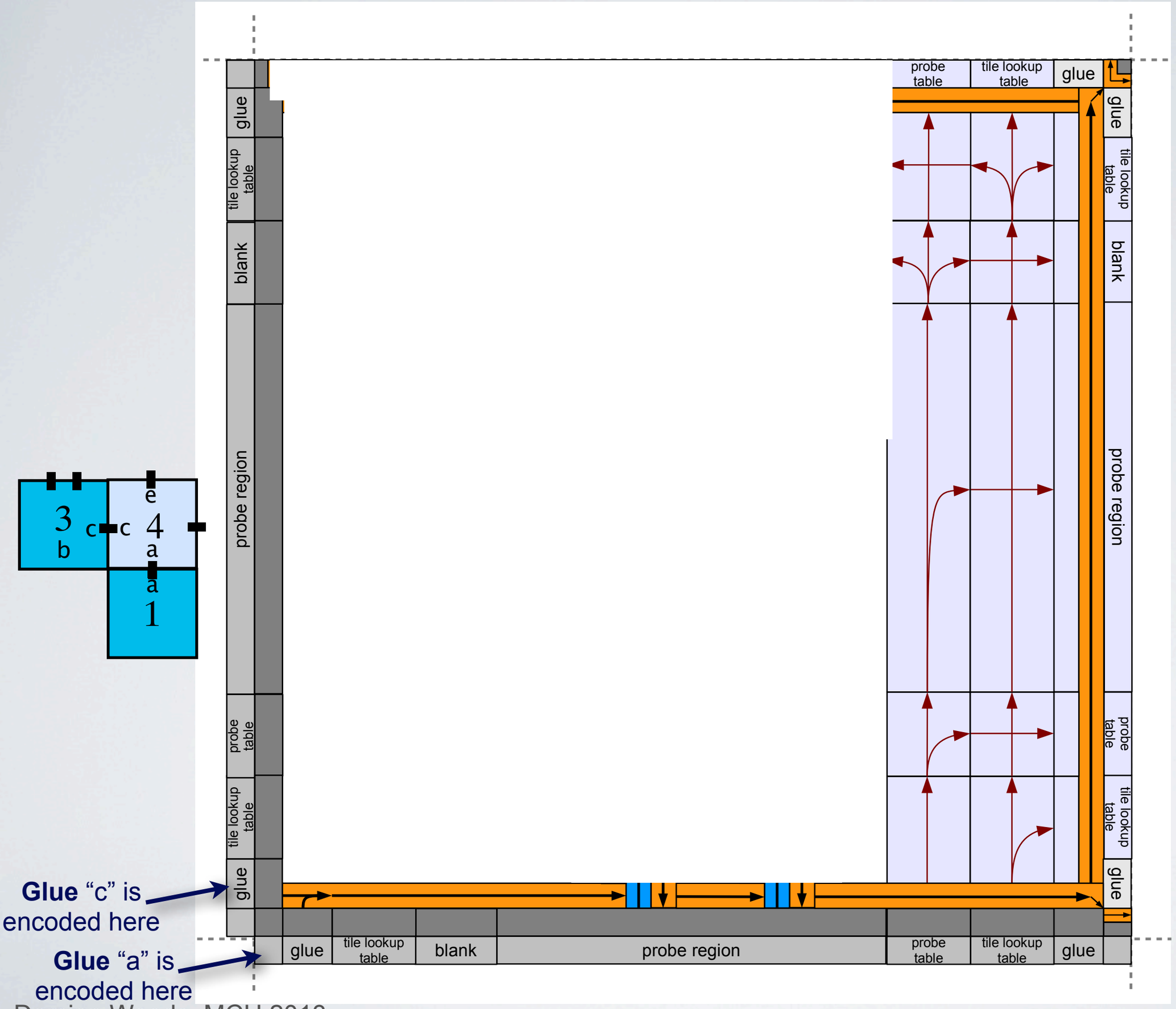

Two-sided binding with adjacent cooperating supersides

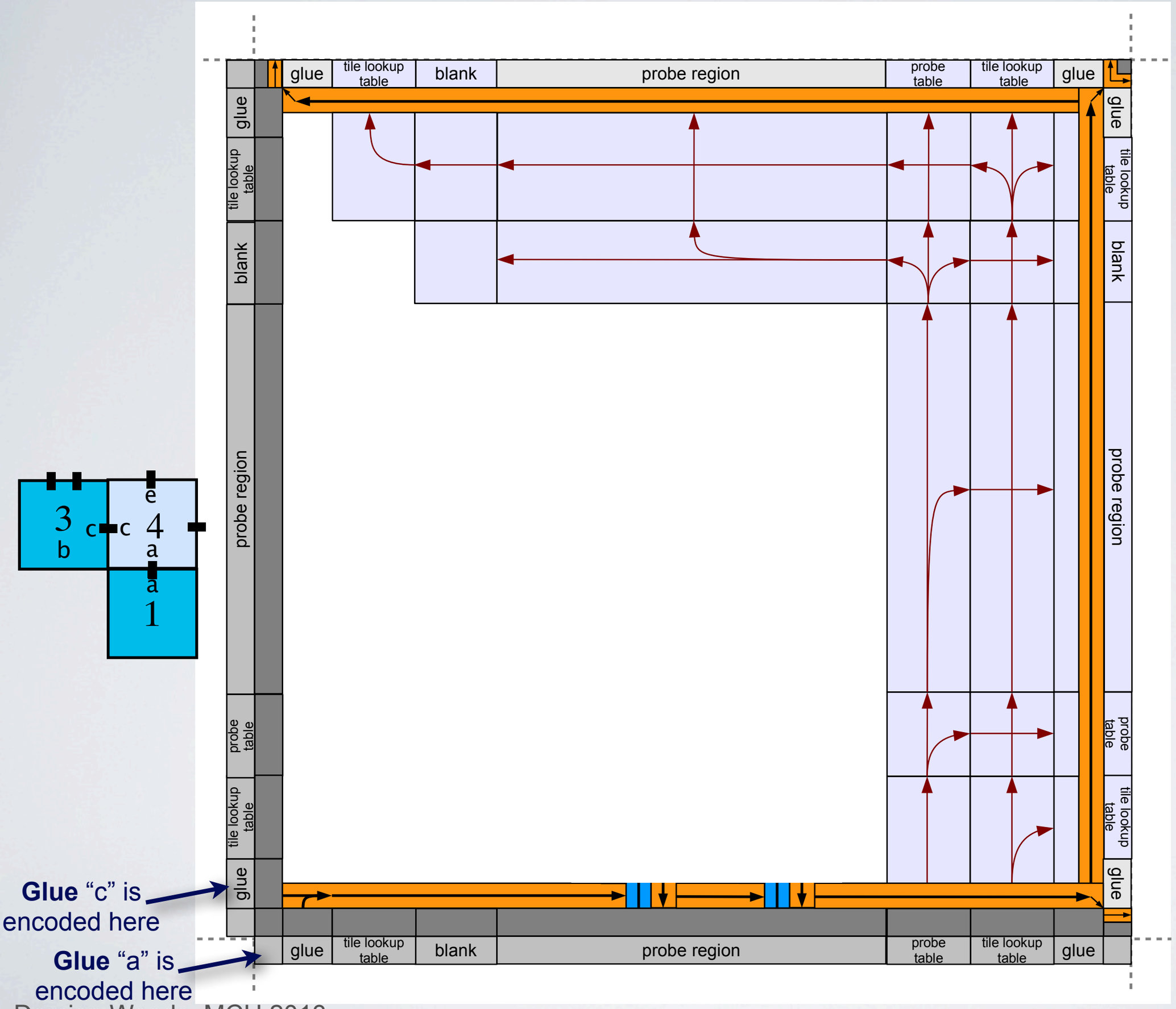

A key problem

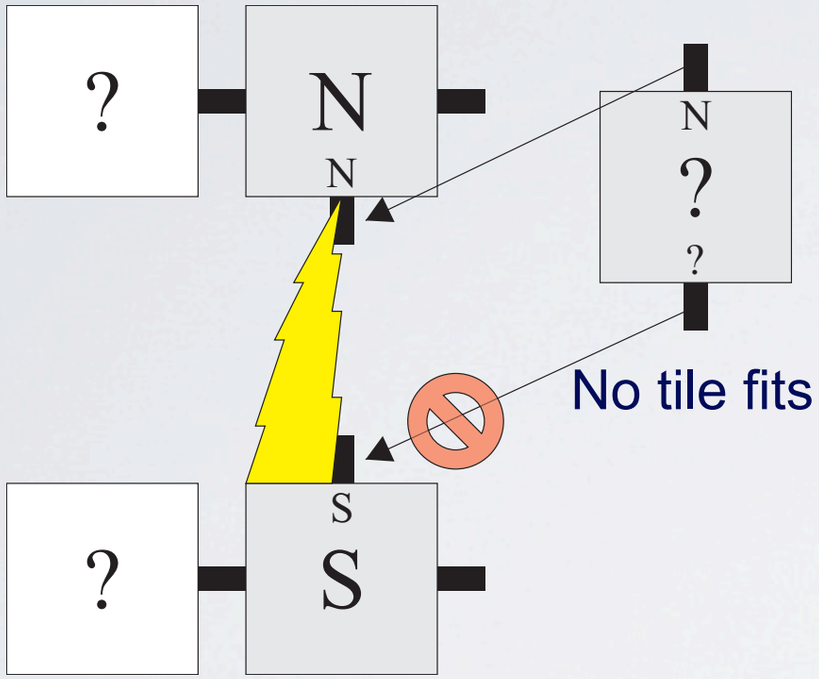

Better luck next time!

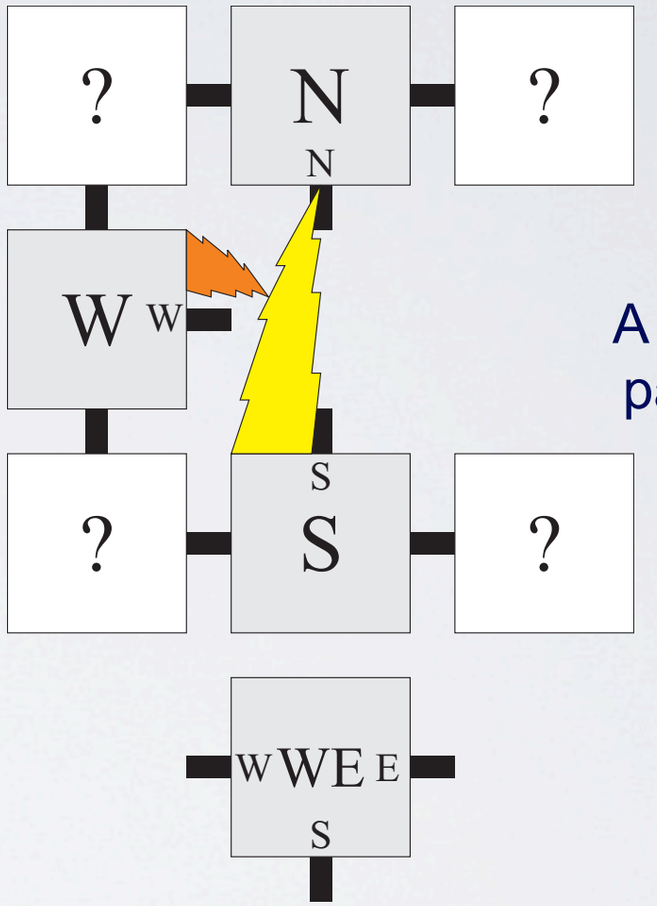

A tile fits, but the path to the right is blocked!

Uh oh!

Two-sided binding with opposite cooperating supersides

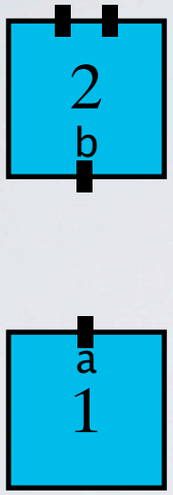

Two-sided binding with opposite cooperating supersides

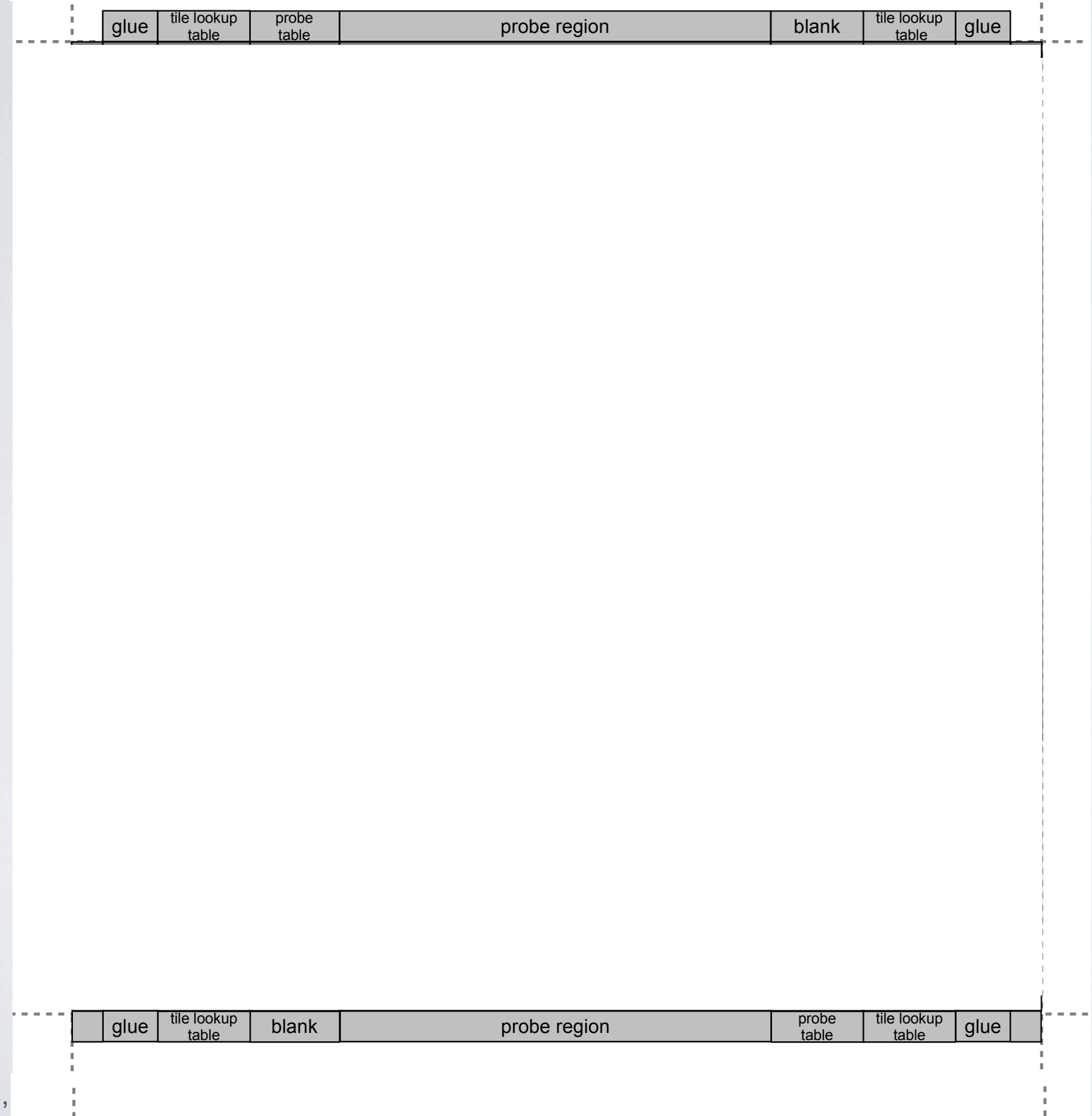

Two-sided binding with opposite cooperating supersides

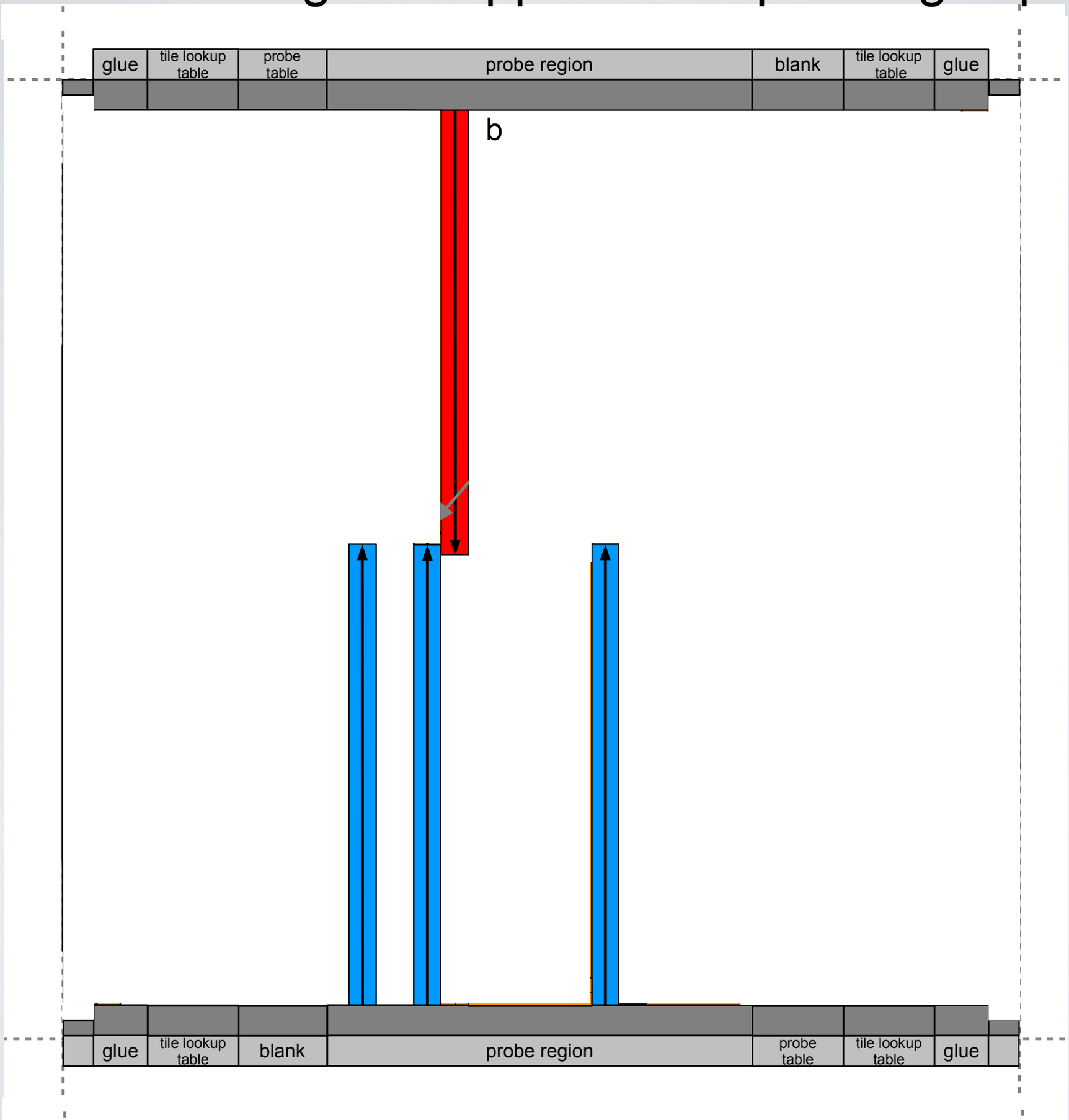

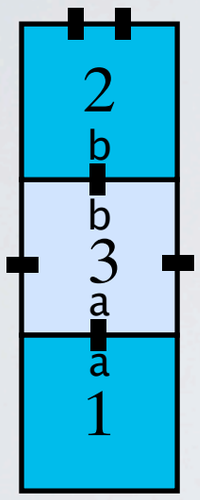

Two-sided binding with opposite cooperating supersides

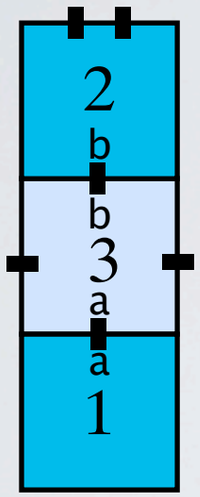

glue | tile lookup table | probe table | probe region | blank | tile lookup table | glue

b

collect north & south glues, & random number

glue | tile lookup table | blank | probe region | probe table | tile lookup table | glue

Two-sided binding with opposite cooperating supersides

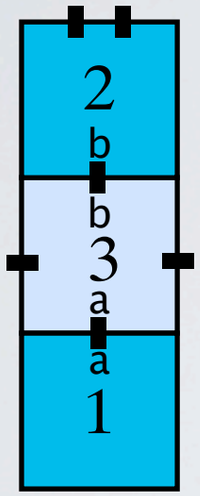

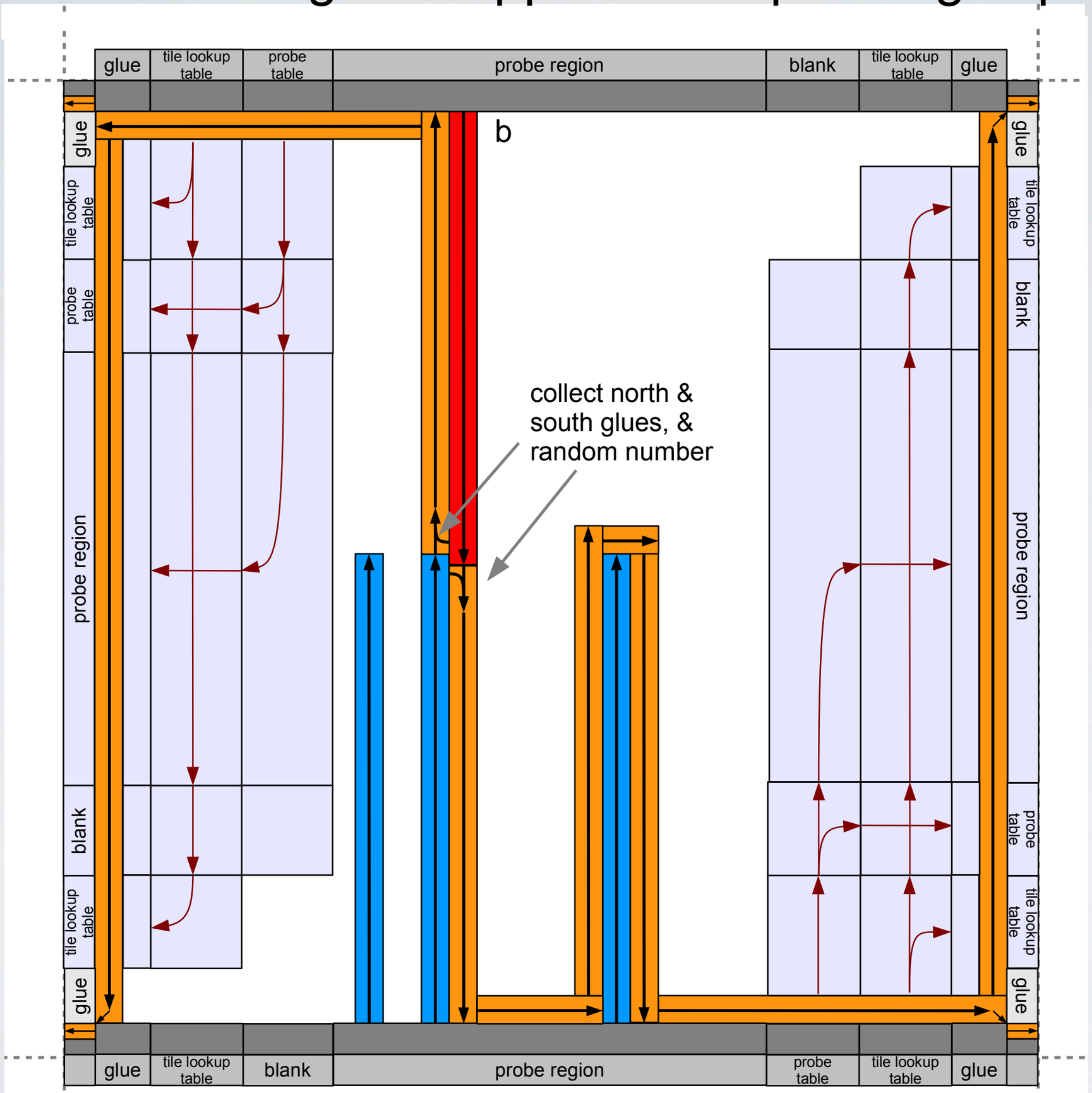

3-sided “uh-oh” example: probes miss each other

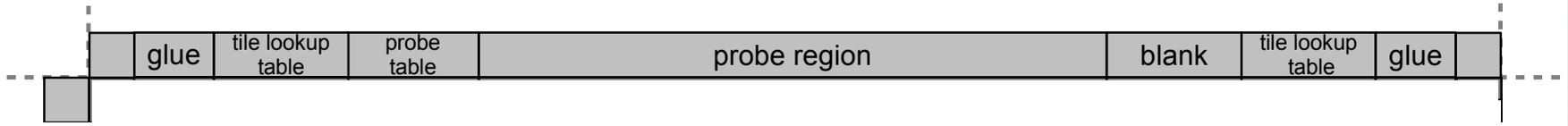

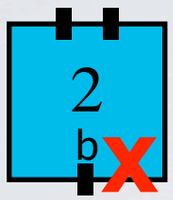

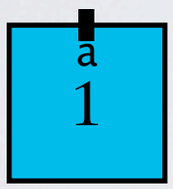

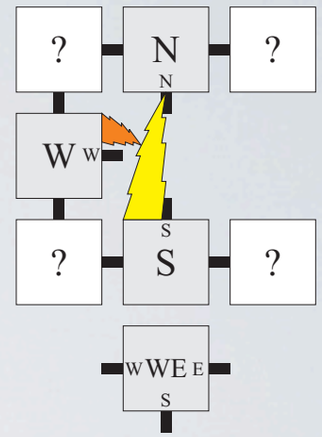

uh oh!

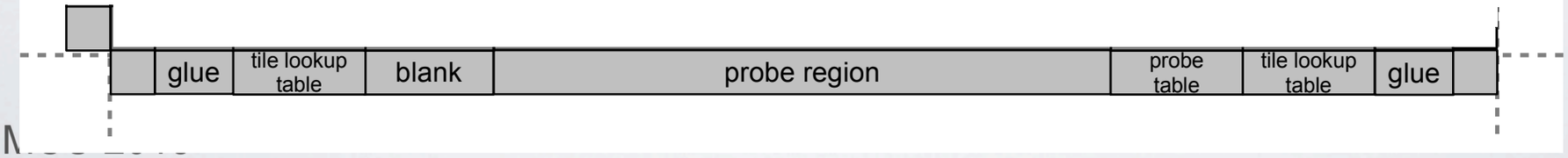

3-sided “uh-oh” example: probes miss each other

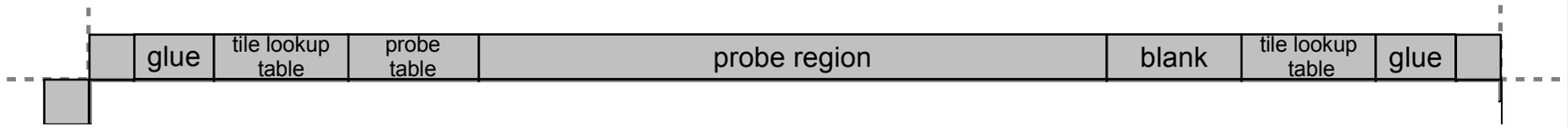

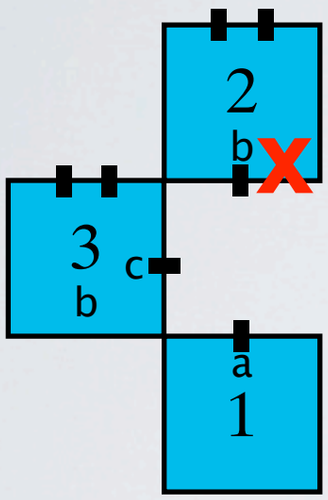

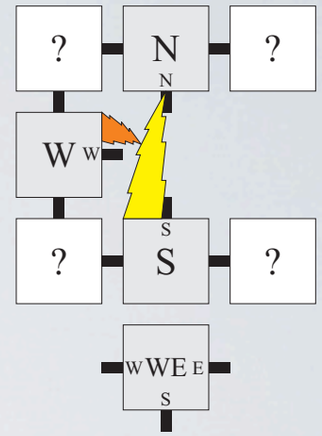

uh oh!

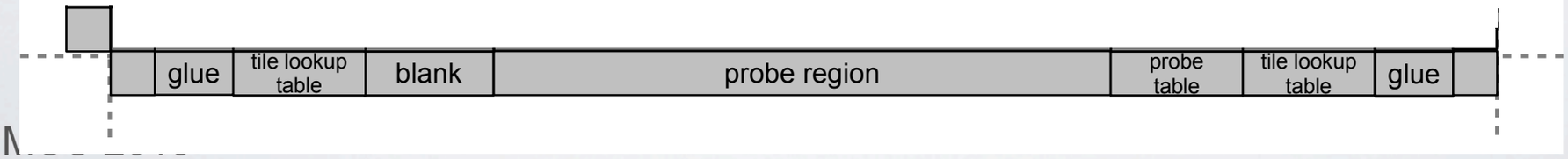

3-sided “uh-oh” example: probes miss each other

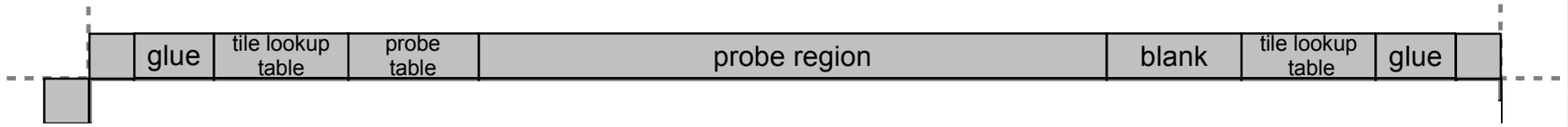

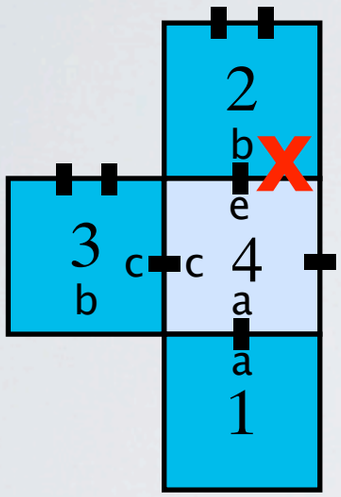

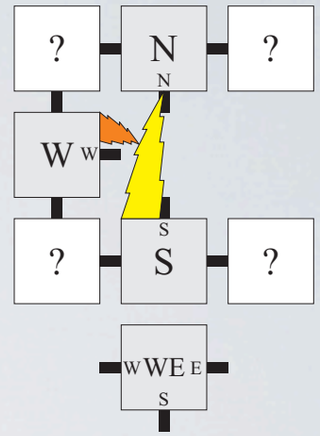

uh oh!

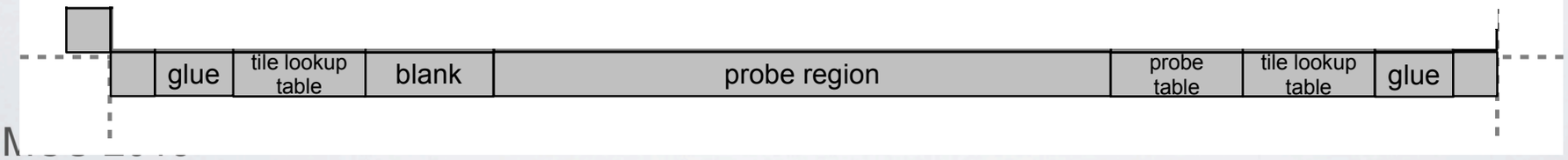

3-sided “uh-oh” example: probes miss each other

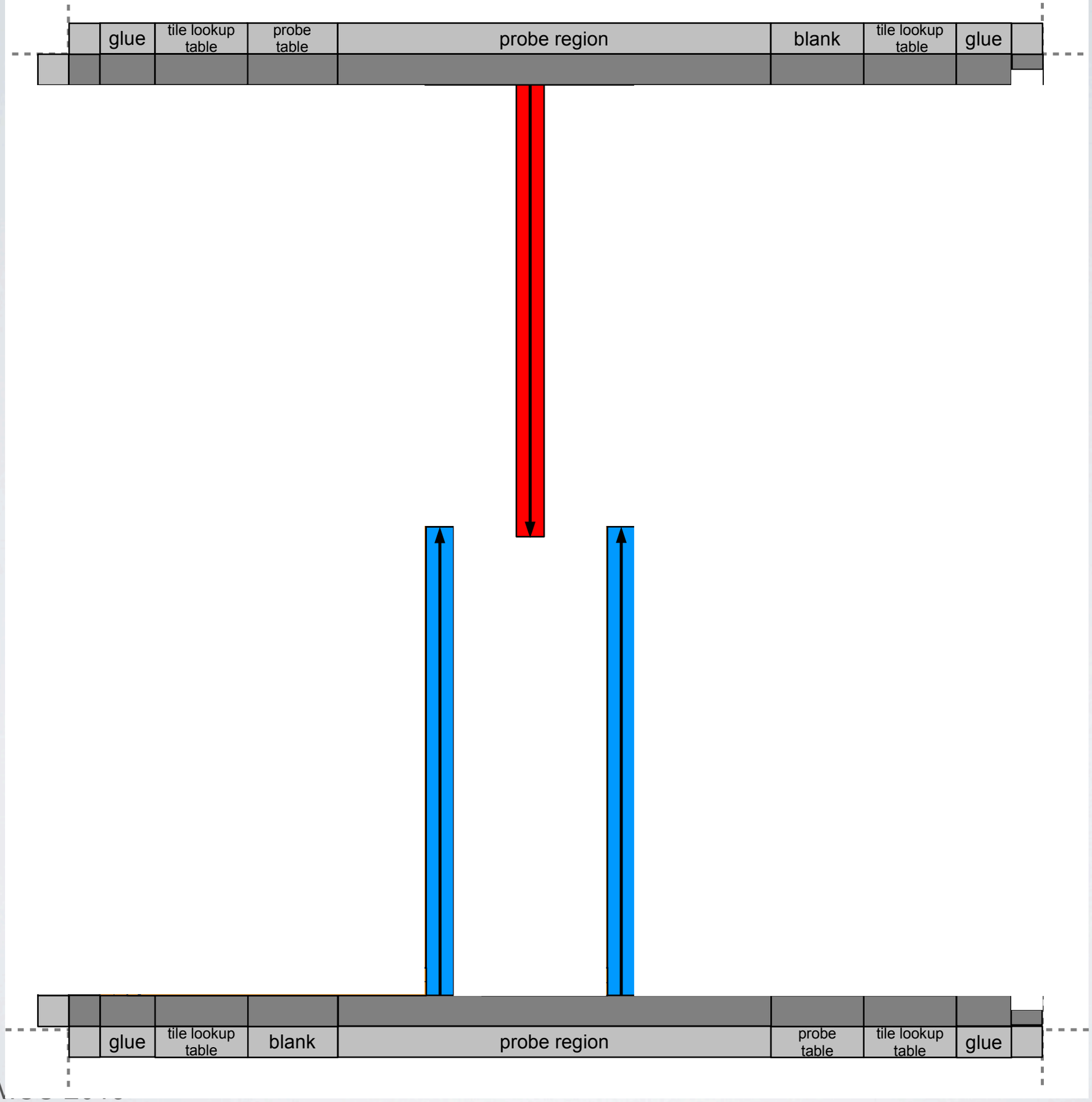

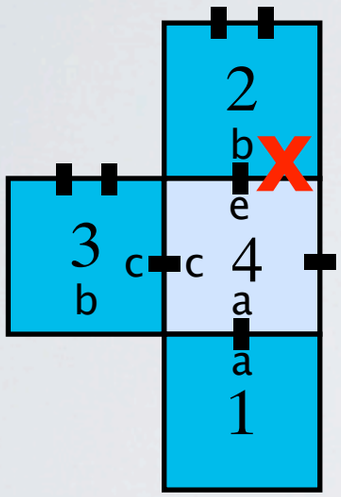

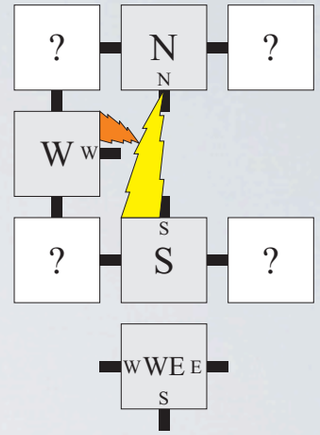

uh oh!

3-sided “uh-oh” example: probes miss each other

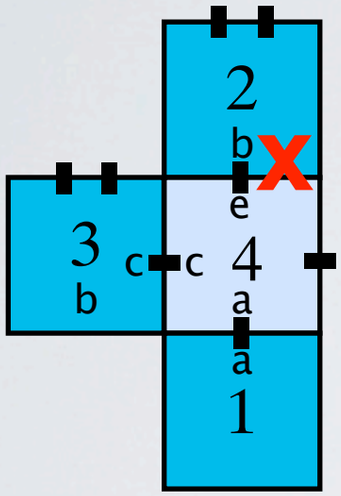

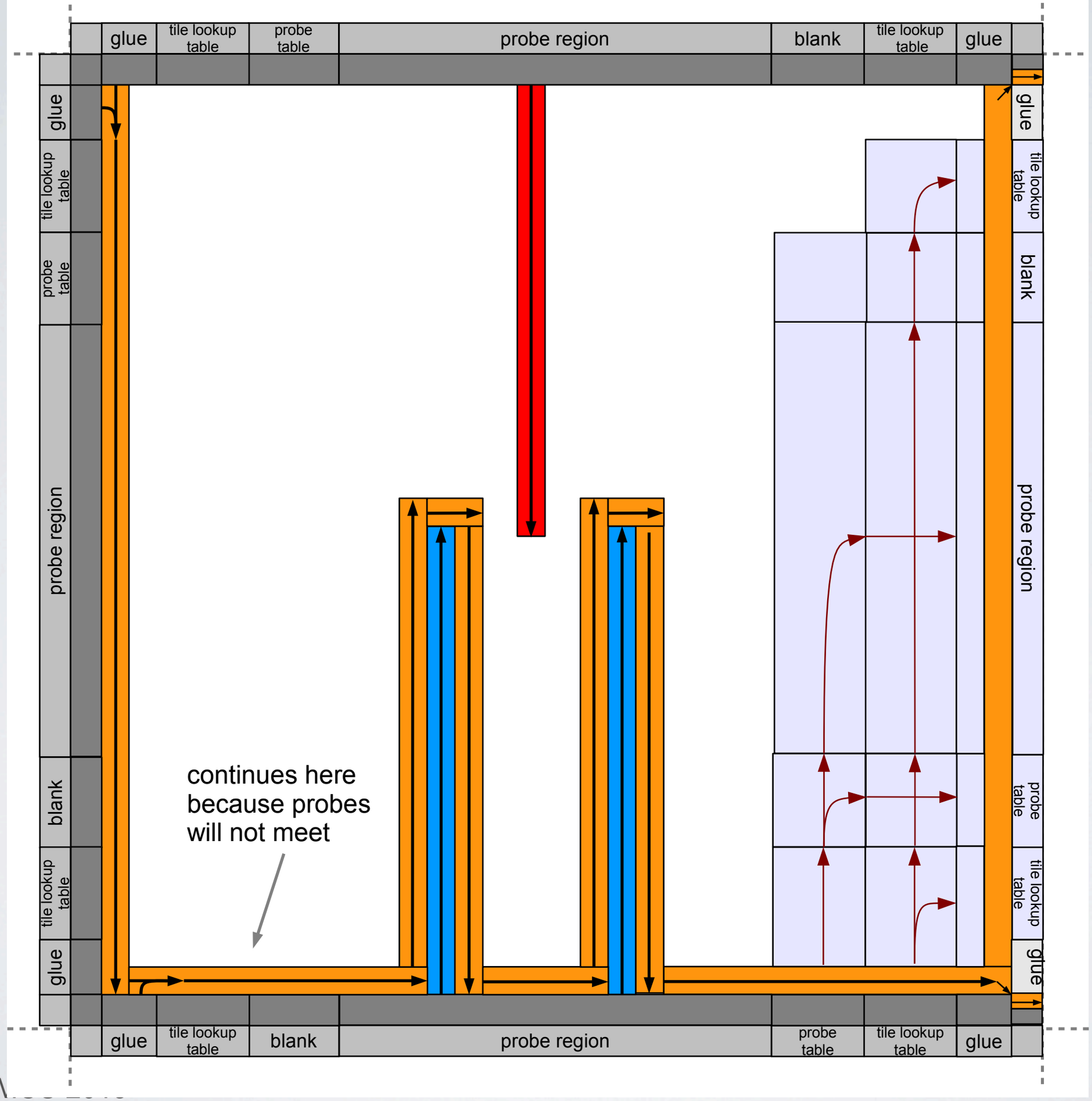

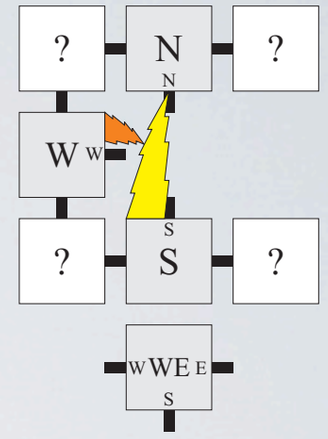

uh oh!

- Variety of cases for different orders of superside arrival
- Superside win/lose configurations and crawler initiation locations (green)

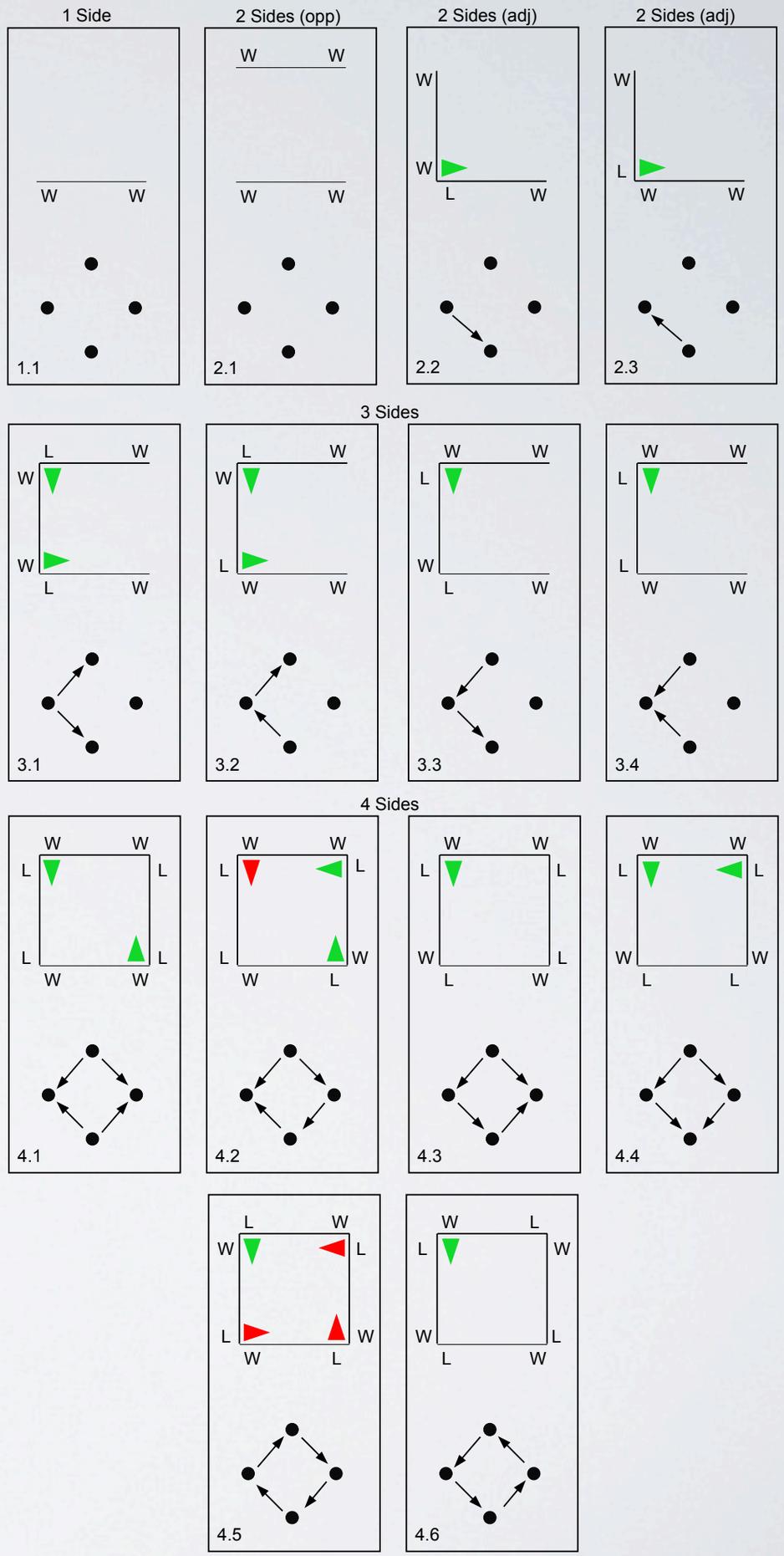

- Proof analogy:
  - Distributed game
  - Computation & geometry
  - Key challenge: make all the tricks work together

Is the abstract tile assembly model intrinsically universal?

Yes!

Theorem: There is a single universal tile set *U* that simulates *any* tile assembly system

Doty, Lutz, Patitz, Schweller, Summers, Woods. FOCS 2012

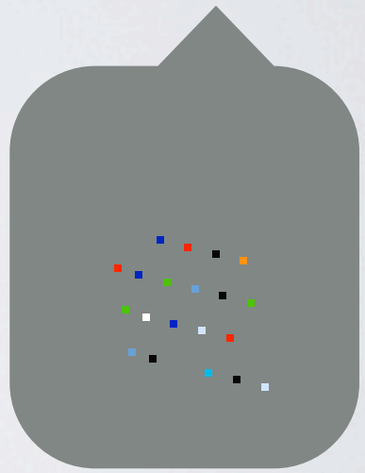

Universal tile set

Our journey

aTAM, $\tau \geq 2$ (IU [11])

Theorem: There is a **single** rotatable polygon that simulates **all** tile assembly systems

tile assembly system *T*

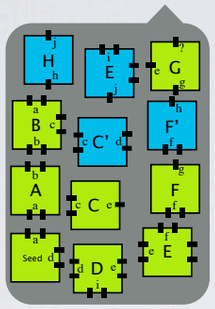

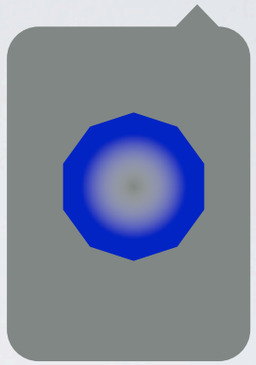

Theorem: For each (Wang) plane tile system there is one rotatable polygon that simulates it

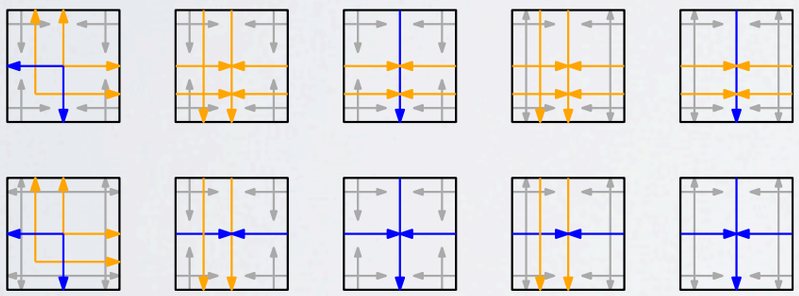

Robinson's 10-tile aperiodic tile set

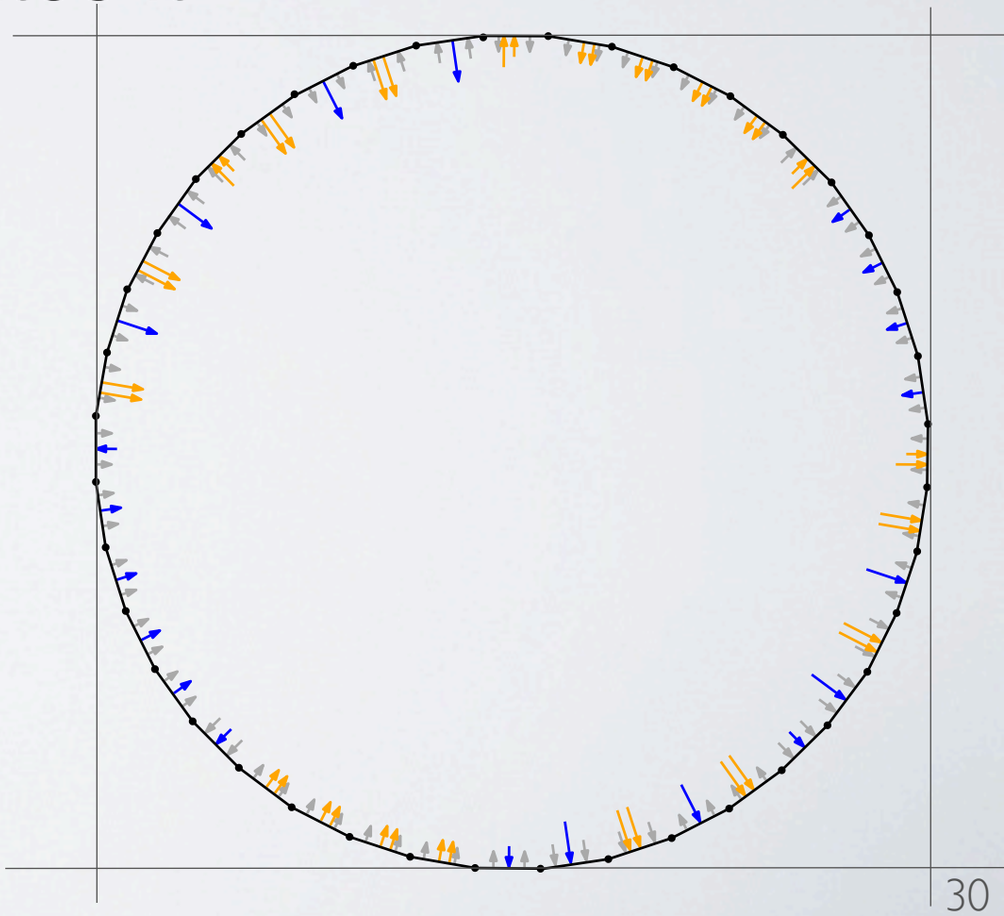

Demaine, Demaine, Fekete, Patitz, Schweller, Winslow, Woods. One Tile to Rule Them All: Simulating Any Turing Machine, Tile Assembly System, or Tiling System with One Rotatable Puzzle Piece. arXiv 2012.

A rotatable polygon that simulates a tile set

- For each set of (possibly rotatable, flipable) Wang square/hexagon tiles there is a single rotatable tile that simulates it

Hexagon example

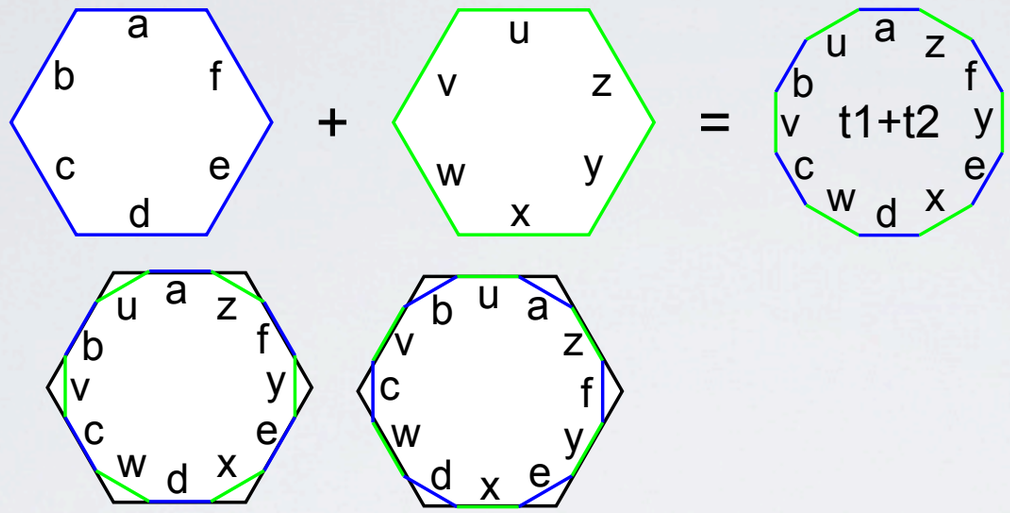

rotation 1 = t1 rotation 2 = t2

A rotatable polygon that simulates a tile set

- For each set of (possibly rotatable, flipable) Wang square/hexagon tiles there is a single rotatable tile that simulates it

Hexagon example

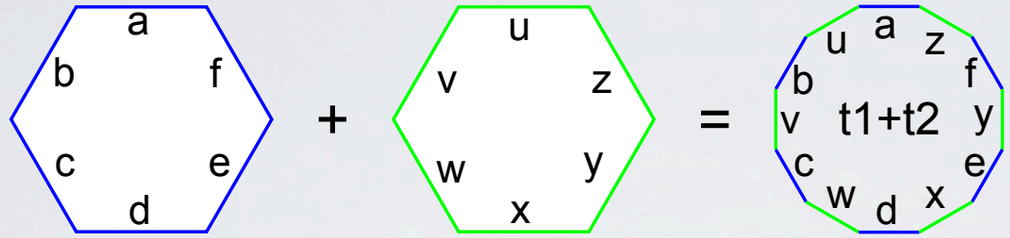

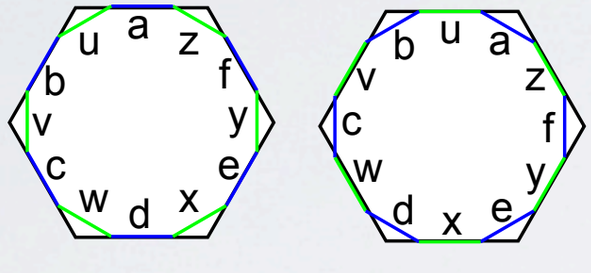

rotation 1 = t1 rotation 2 = t2

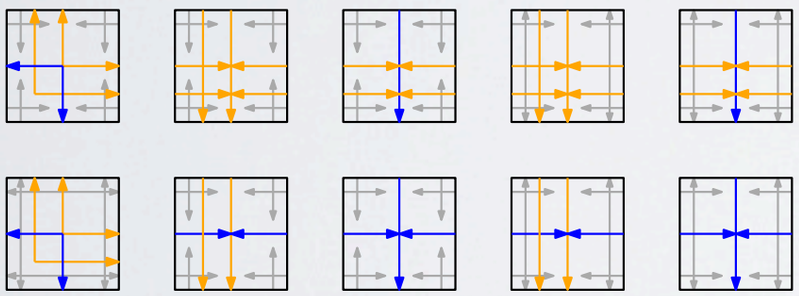

Robinson's 10-tile aperiodic tile set
(complimentary matching constraint)

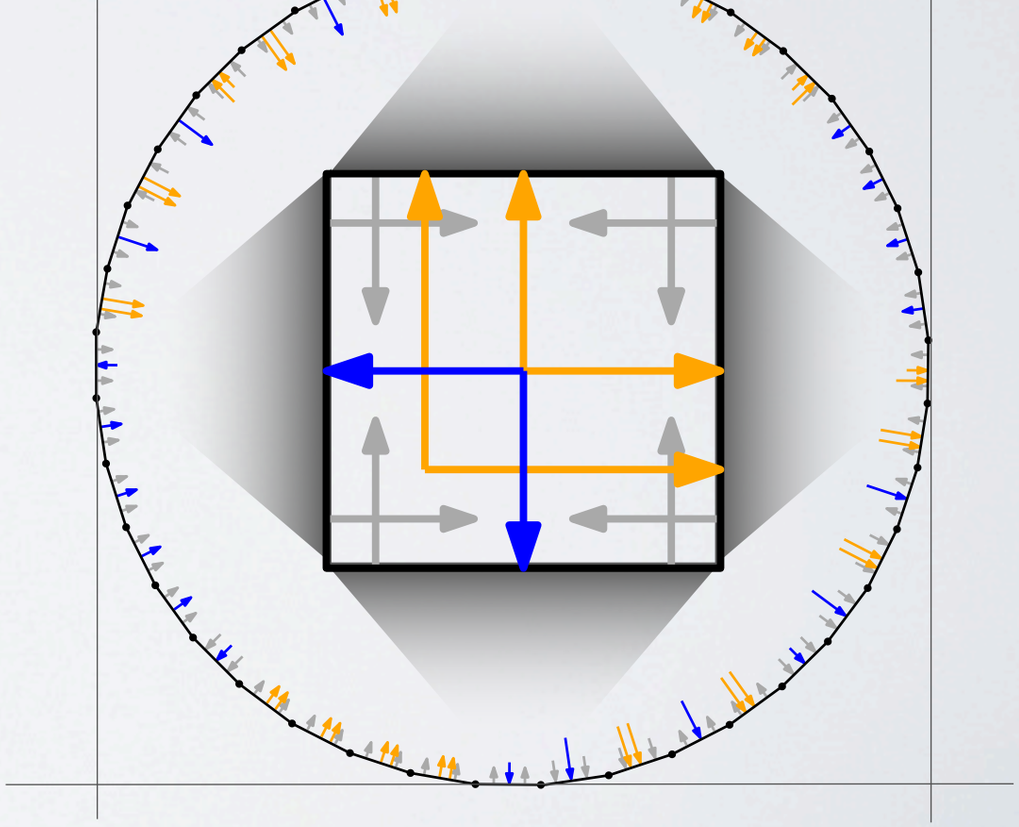

A rotatable polygon that simulates a tile set

- For each set of (possibly rotatable, and/or flipable) square or hexagon tiles there is a single (rotatable, flipable) tile that simulates it

Hexagon example

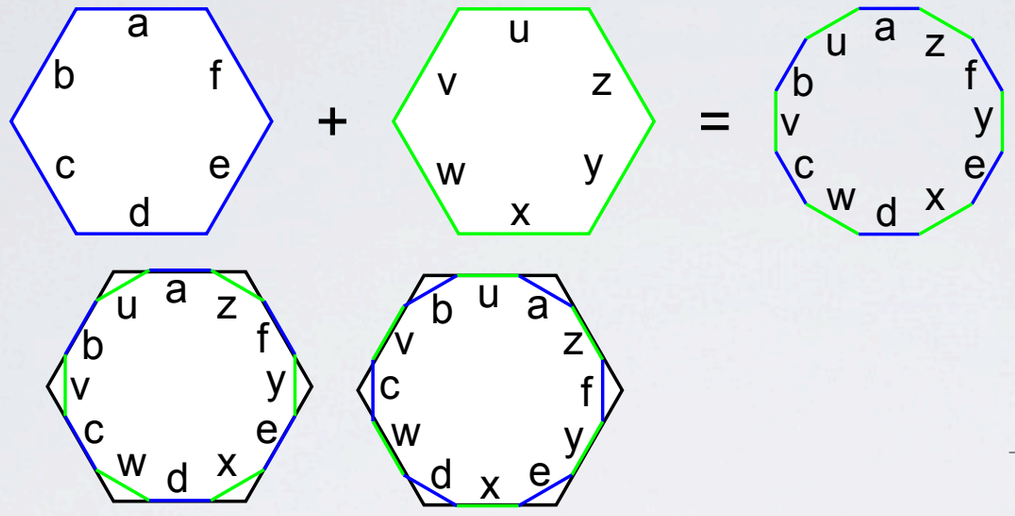

rotation 1 = t1 rotation 2 = t2

(other rotations may cause problems)

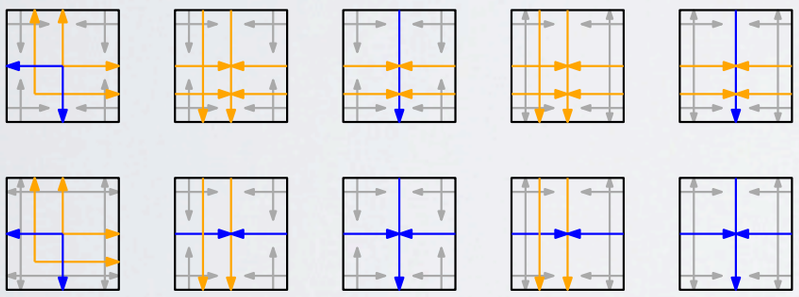

Robinson's 10-tile aperiodic tile set
(complimentary matching constraint)

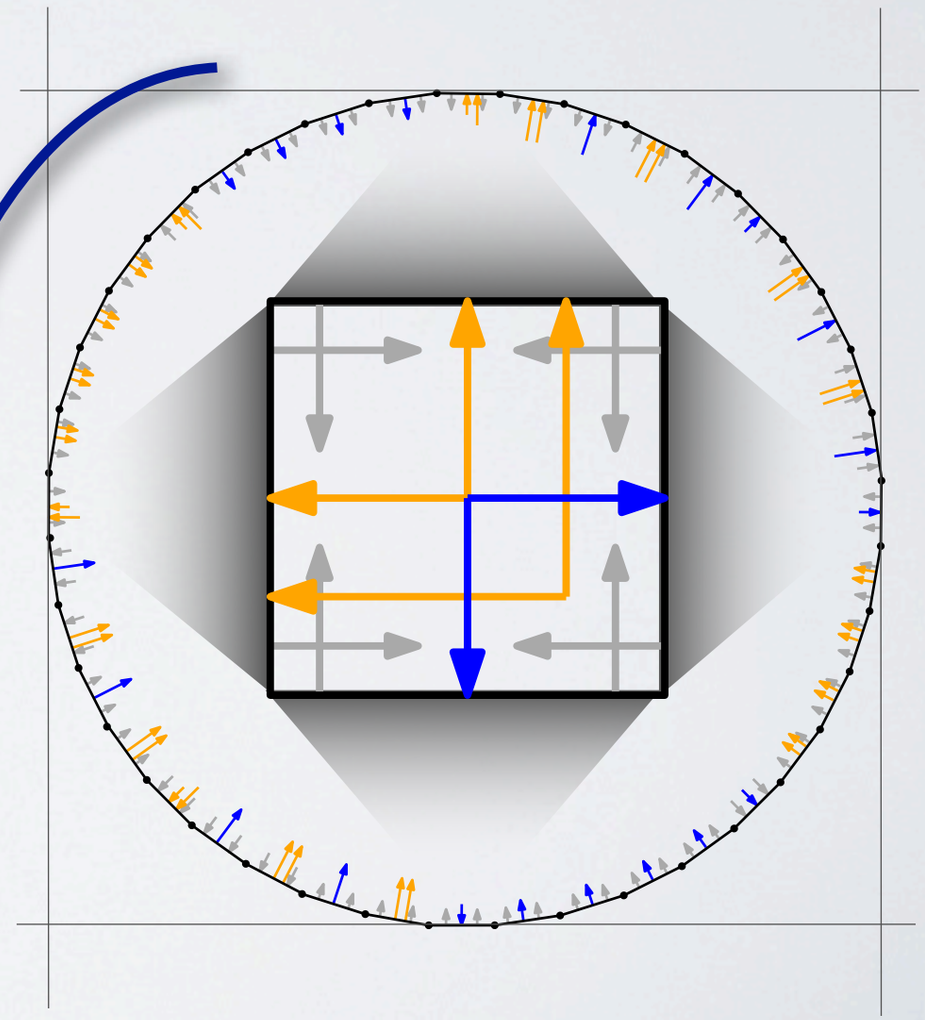

- An aperiodic tile set with 1 tile!
- Small gaps in the tilings
- We have given a general method (a compiler) to convert any square/hexagon plane tiling tile set to a single tile that simulates it
- So we can have a single tile that is aperiodic, or a single tile that simulates a universal Turing machine, etc.

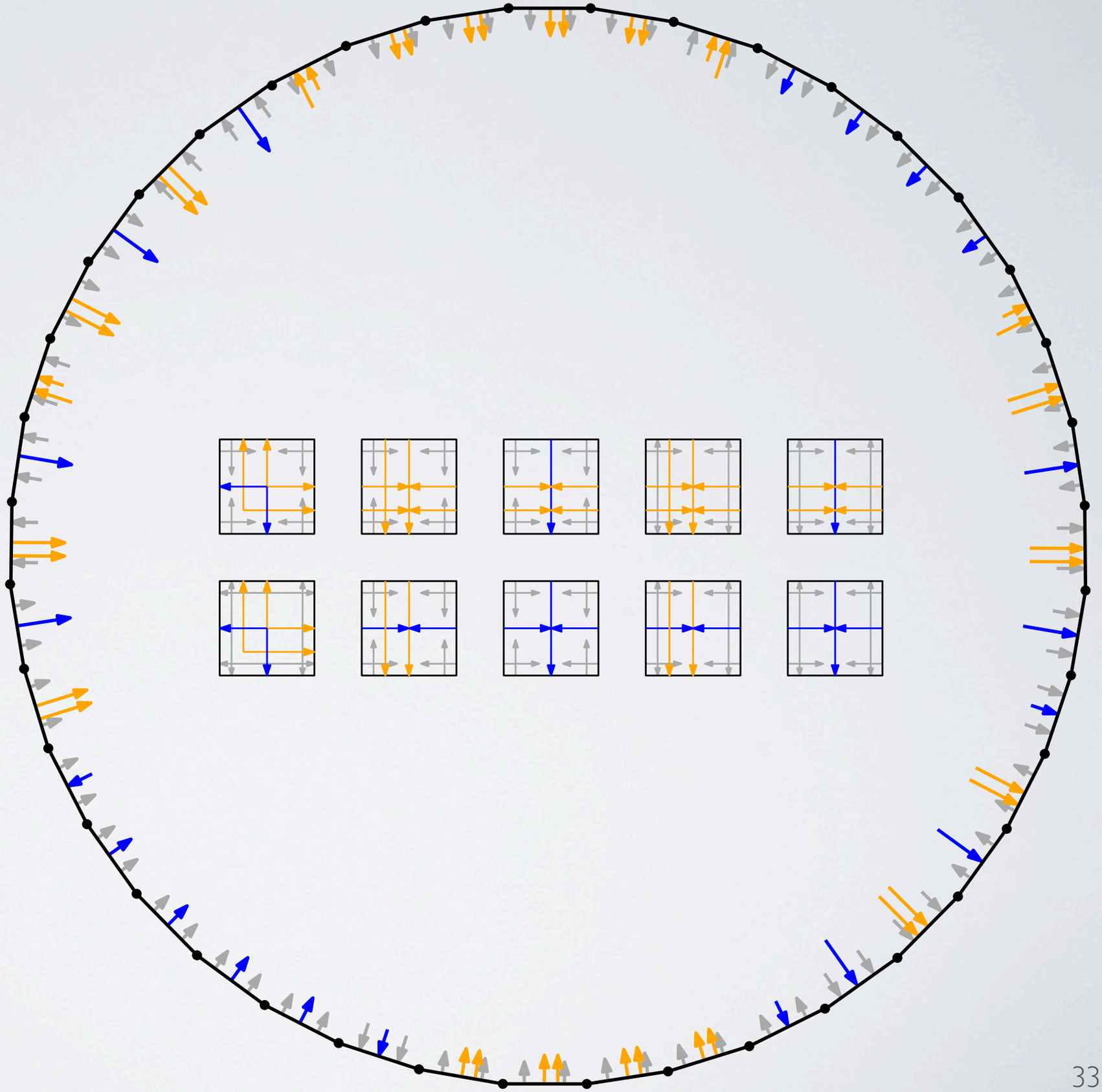

A harder challenge: one tile for all of tile self-assembly

- Simulating tile assembly systems is significantly trickier than plane (Wang) tiling systems
- We want to design a single rotatable, flipable tile that simulates any tile assembly system
- Strength tau glues on rotatable tiles => Argh! There's pumpable junk everywhere!
- So lets not use strength tau glues on The One.
- Maybe we could find an intrinsically universal square tile set with strength < tau glues?
  - No! Any such tile set with a finite seed can not leave the seed's bounding box
  - Lets try hexagons!

Low strength hexes simulate high-strength squares

- Strength 1 or 0 hexagon glues, simulating strength 2, 1 or 0 square glues

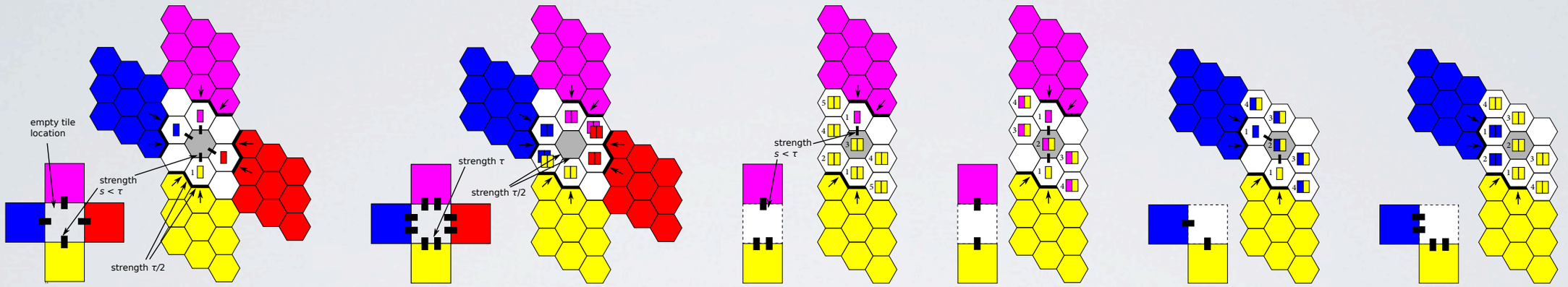

- The we can simulate a set of low-strength hexagons with a single rotatable polygon
  - Bumps and dents to stop incorrect orientations and incorrect bindings
  - Glues are carefully rearranged on the polygon to allow “self seeding”
  - Many details omitted!

Construction overview

Tile assembly system *T*

Hexagonal tile assembly system that simulates *T* (using low-strength glues)

One polygon that simulates *T*

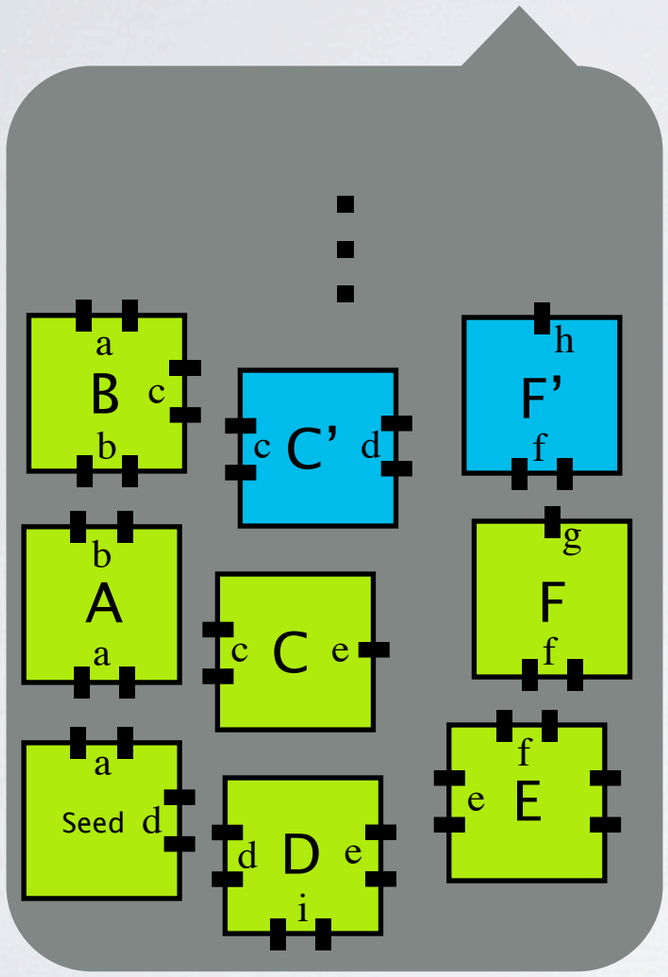

Intrinsically universal tile set

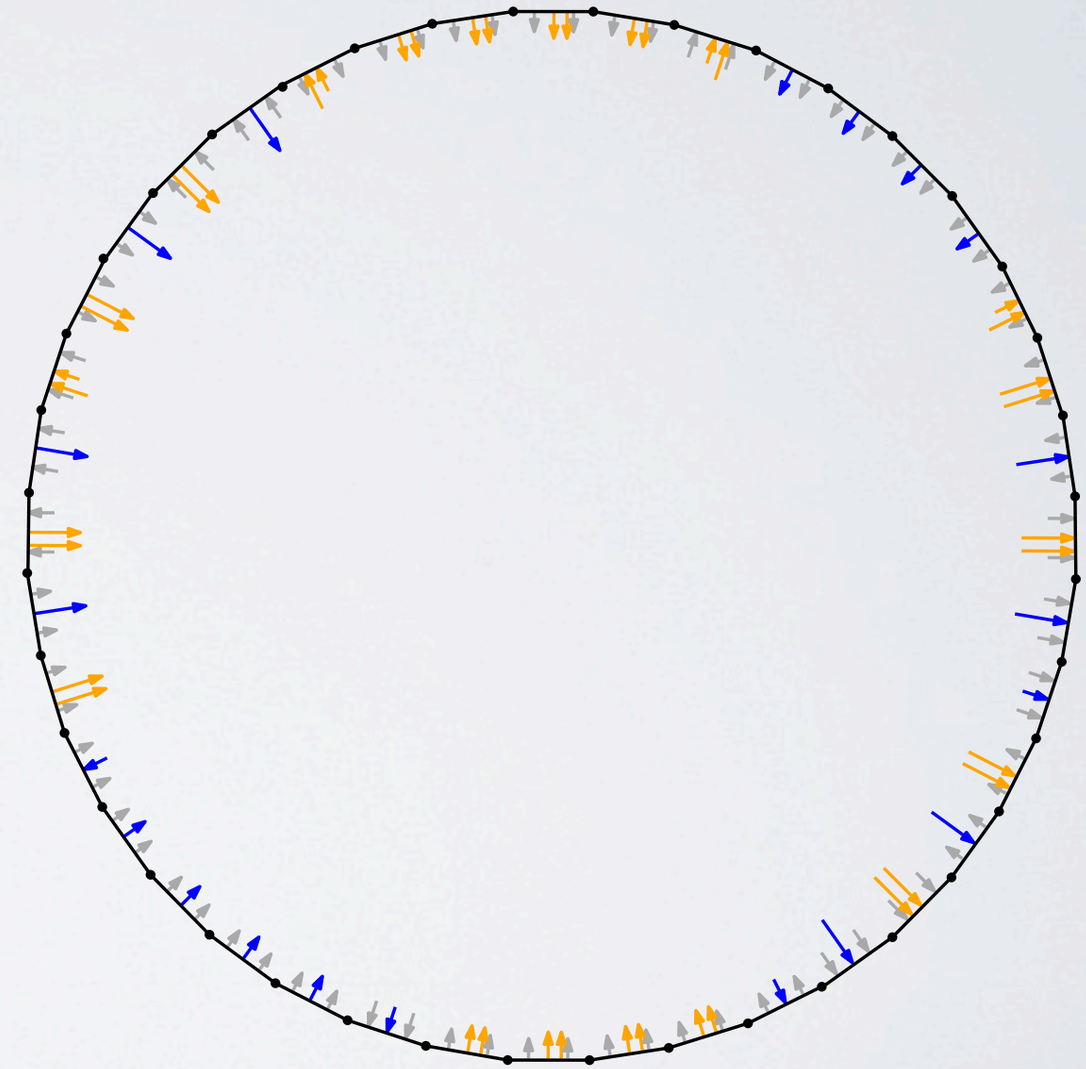

The one

Construction overview

Tile assembly system *T*

→

Hexagonal tile assembly system that simulates *T* (using low-strength glues)

→

One polygon that simulates *T*

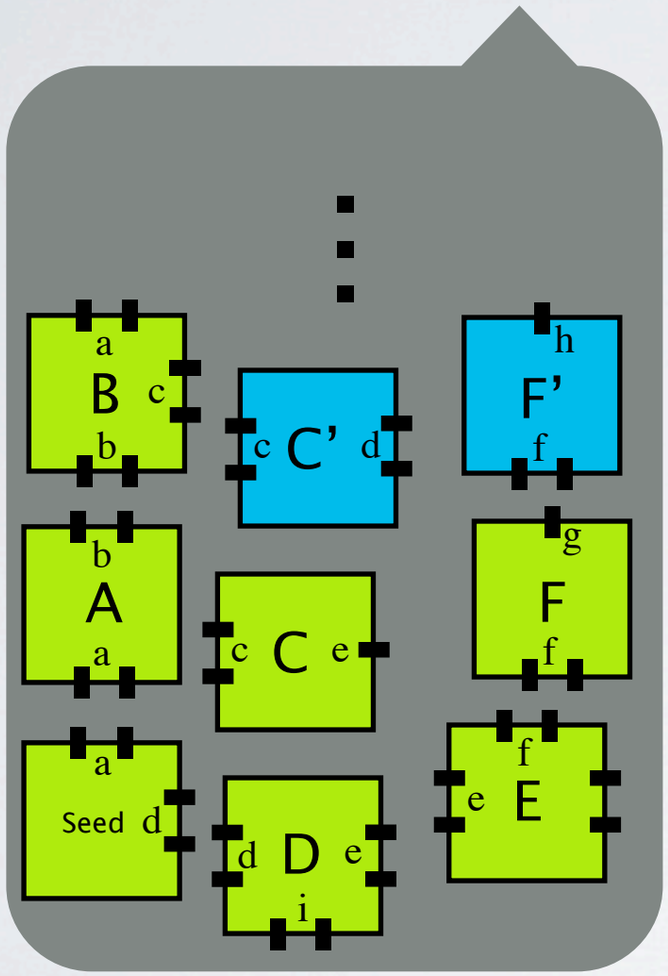

Intrinsically universal tile set

→

The one

To use The One, simply apply a sequence of tile assembly system “reductions”:

Tile assembly system T → Tile assembly system U_T over the intrinsically universal tile set U → Hexagonal tile assembly system (with low strength glues) → A tile assembly system that simulates T using the single rotatable flipable polygonal tile

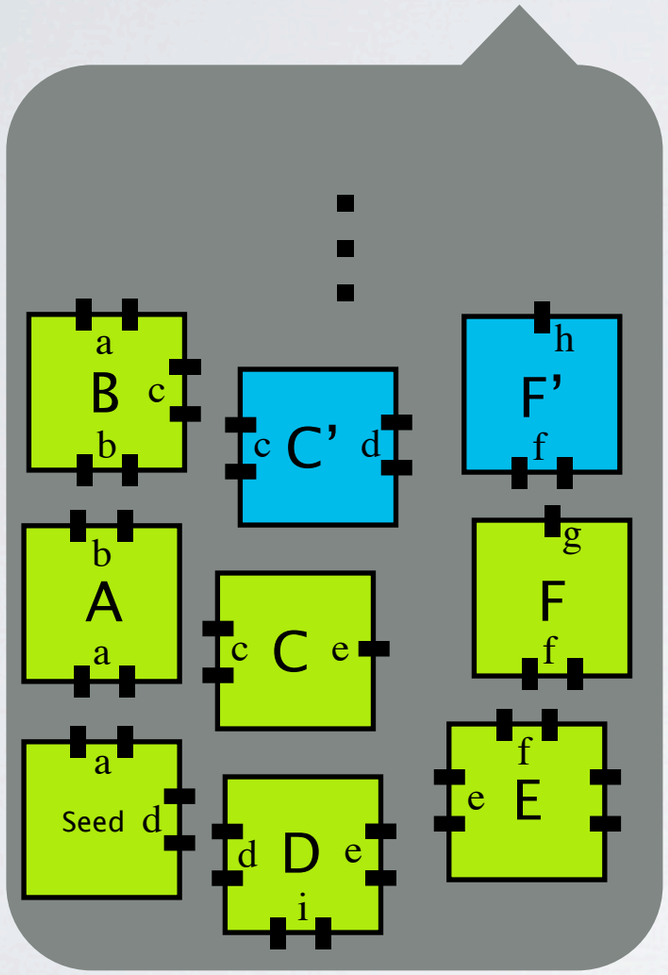

Intrinsically universal tile set

The one

One tile to simulate them all

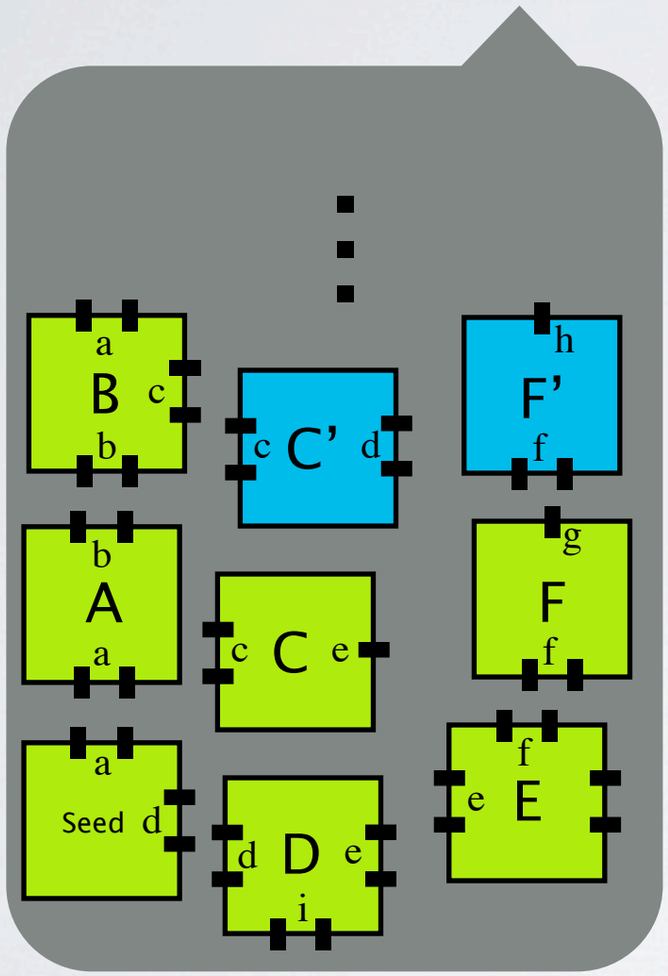

Intrinsically universal tile set

The one

Magic dust

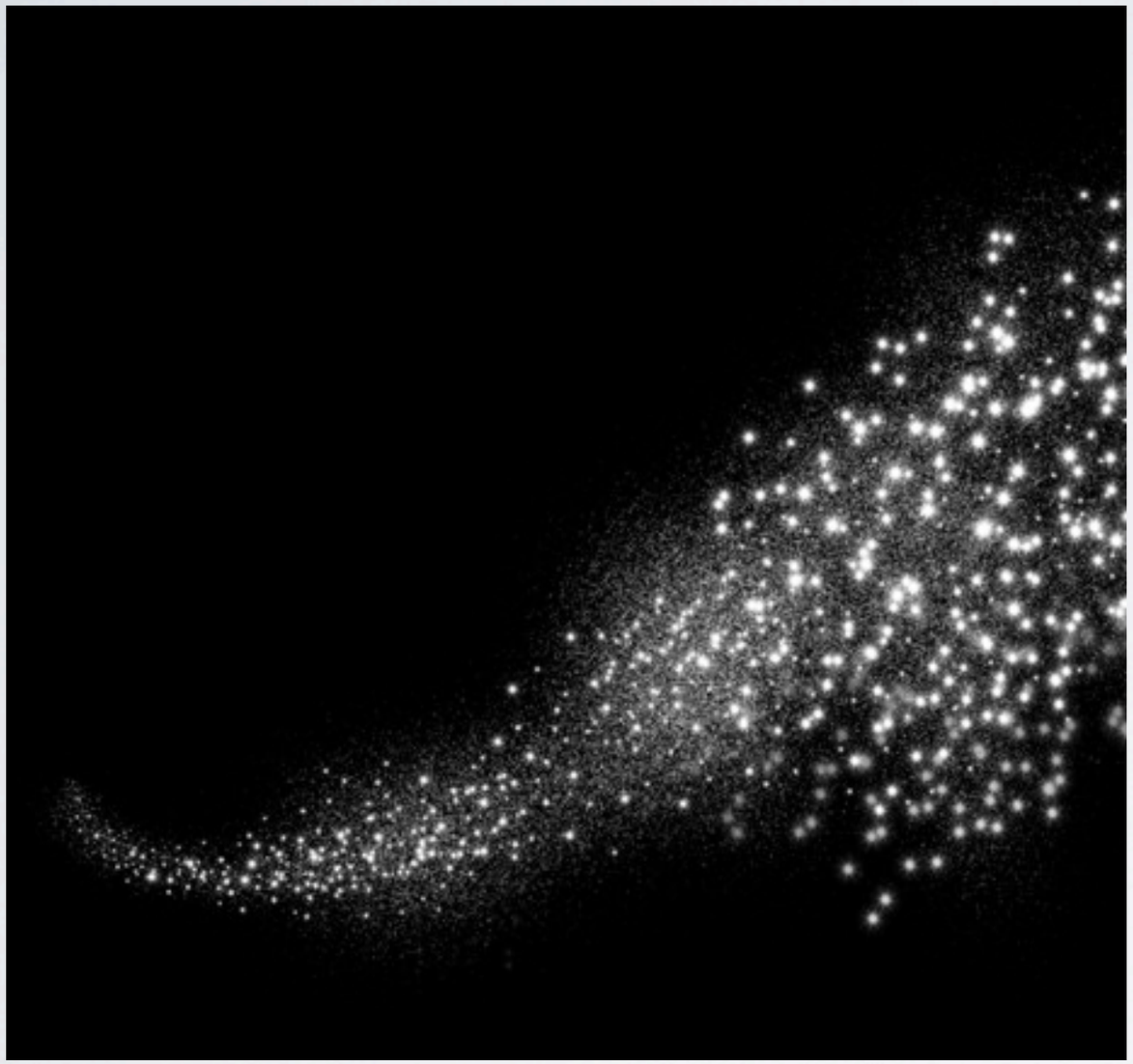

=

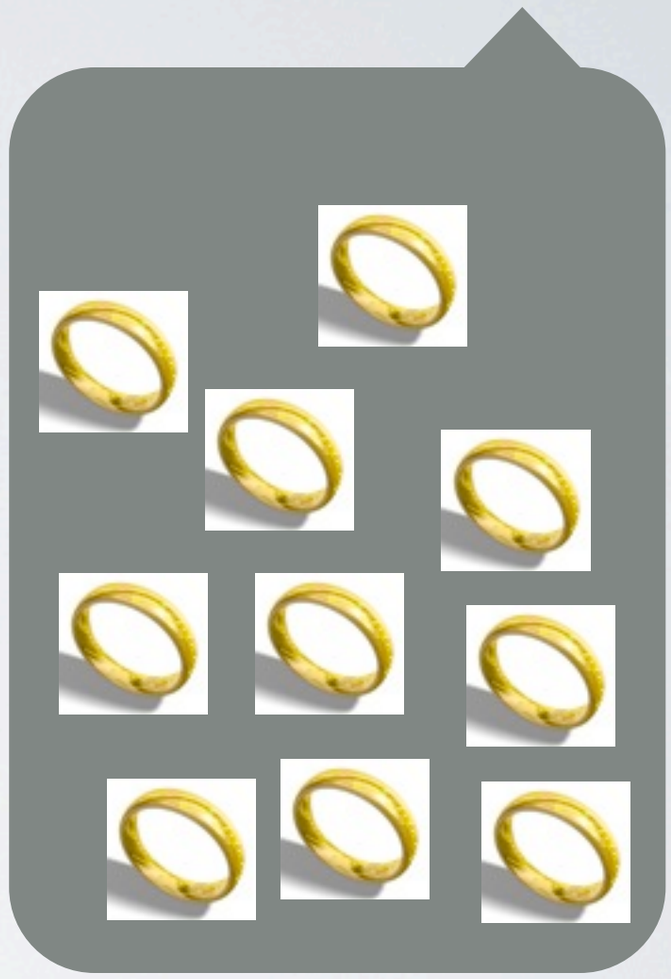

http://nighthawk101stock.deviantart.com/

Our journey

polygon
TAM, $\tau = 2$

$\cup$| [8]

hexagon
TAM, $\tau = 2$

[8]
$\not\subset$

aTAM, $\tau \geq 2$ (IU [11])

Our journey

polygon
TAM, $\tau = 2$

$\cup|$ [8]

hexagon
TAM, $\tau = 2$

[8]
$\supseteq$

aTAM, $\tau \geq 2$ (IU [11])

Our journey

polygon
TAM, $\tau = 2$

$\cup$| [8]

hexagon
TAM, $\tau = 2$

[8]

$\not\cup$

aTAM, $\tau \geq 2$ (IU [11])

Temperature 1 tile assembly

- Temperature 1 tile assembly systems:
  - Each glues has strength 0 or 1
  - Tile binds to an assembly if >= 1 glues match with strength = 1
  - Snakes on a plane

Temperature 1 tile assembly

- Temperature 1 tile assembly systems:
  - Each glues has strength 0 or 1
  - Tile binds to an assembly if >= 1 glues match with strength = 1
  - Snakes on a plane

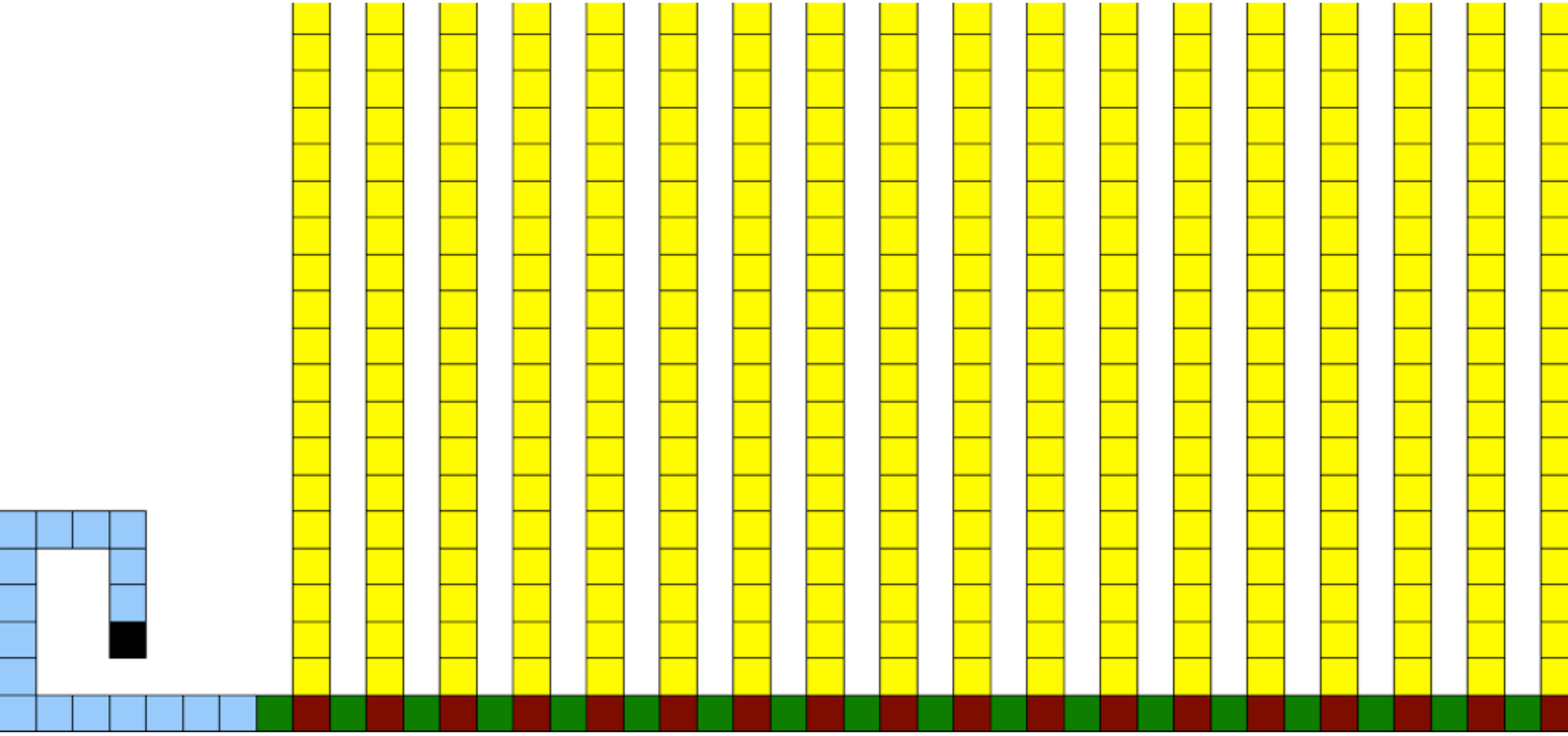

Pic credit: Scott Summers

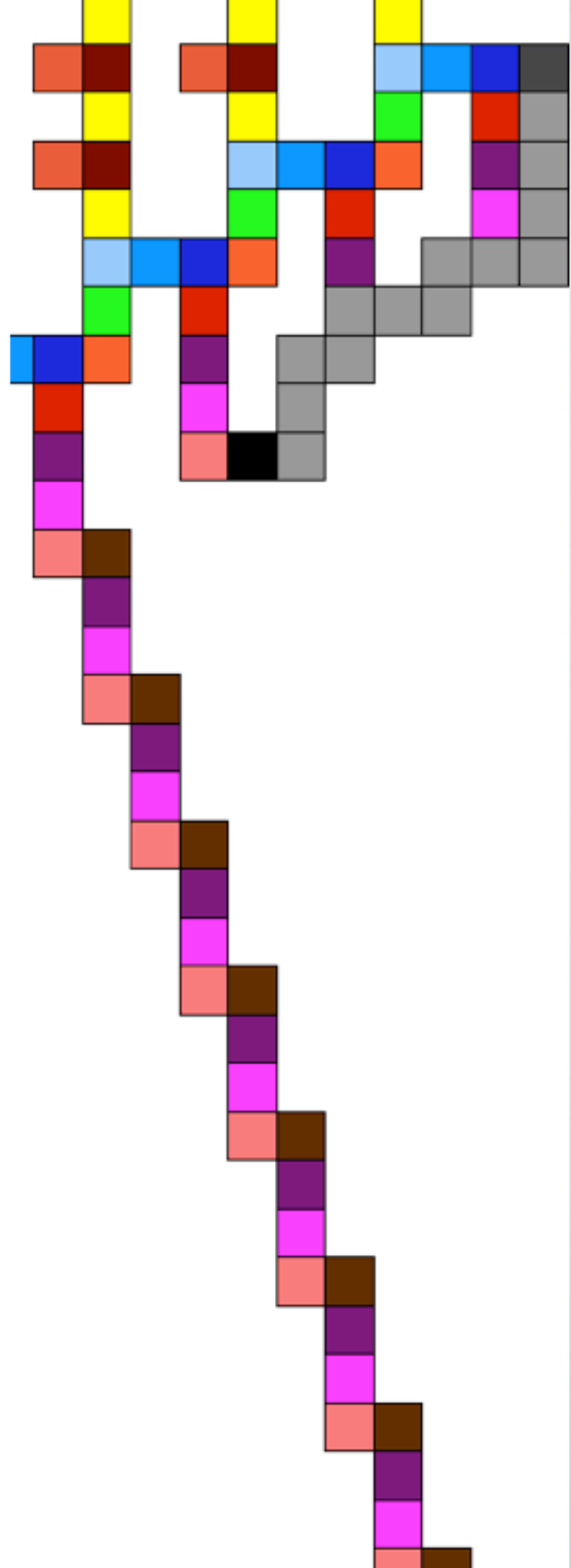

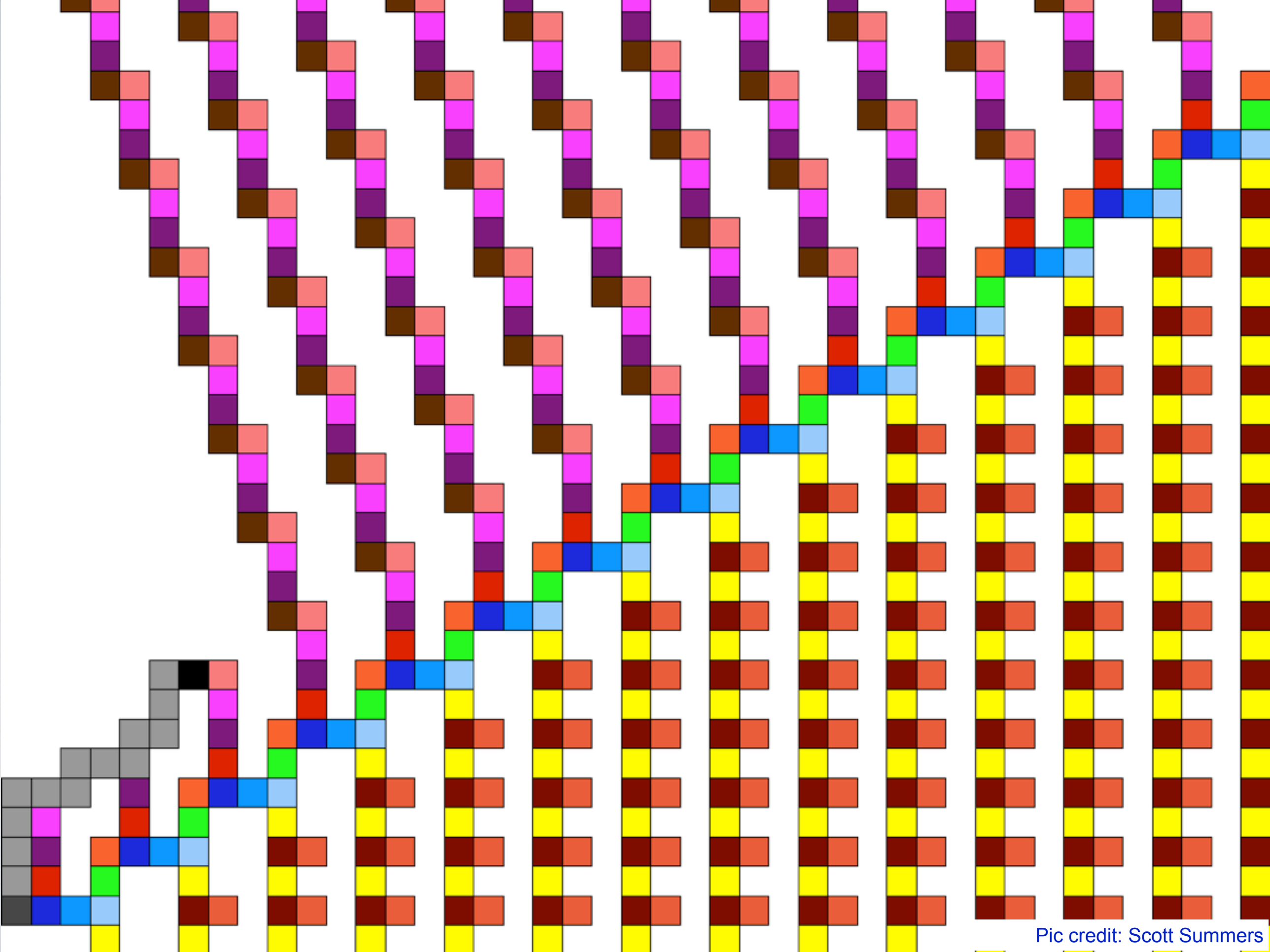

Pic credit: Scott Summers

Is temperature 1 computationally weak?

- It has been conjectured (since 2000) that temperature 1 systems are "computationally weak" Rothemund, Winfree. STOC 2000
- Some negative results:
  - Temperature 1 systems that build **fully connected** *n* x *n* squares require at least n^2 tile types Rothemund, Winfree. STOC 2000
  - **Pumpable** temperature 1 systems produce only periodic structures Doty, Patitz, Summers. TCS 2011
  - Temperature 1 with **no mismatches** require 2n-1 tile types to assemble an *n* x *n* square Manuch, Stacho, Stoll. J Comp. Bio. 2010
- Positive results:
  - 3D deterministic temperature 1 simulates Turing machines Cook, Fu Schweller. SODA 2011
  - 2D temperature 1 simulates Turing machine, but with some error Cook, Fu Schweller. SODA 2011
- It remains open whether temperature 1 (aka noncooperative) tile assembly systems can simulate Turing machines deterministically in 2D, whether they can efficiently build squares or other shapes, etc.
- But can they do tile assembly? I.e. can they simulate cooperative tile assembly?
- No! Meunier, Patitz, Summers, Theyssier, Winslow, Woods. SODA 2014

Temperature 1 is not IU for the aTAM

- We will show that no temperature 1 system simulates the following simple temperature 2 system

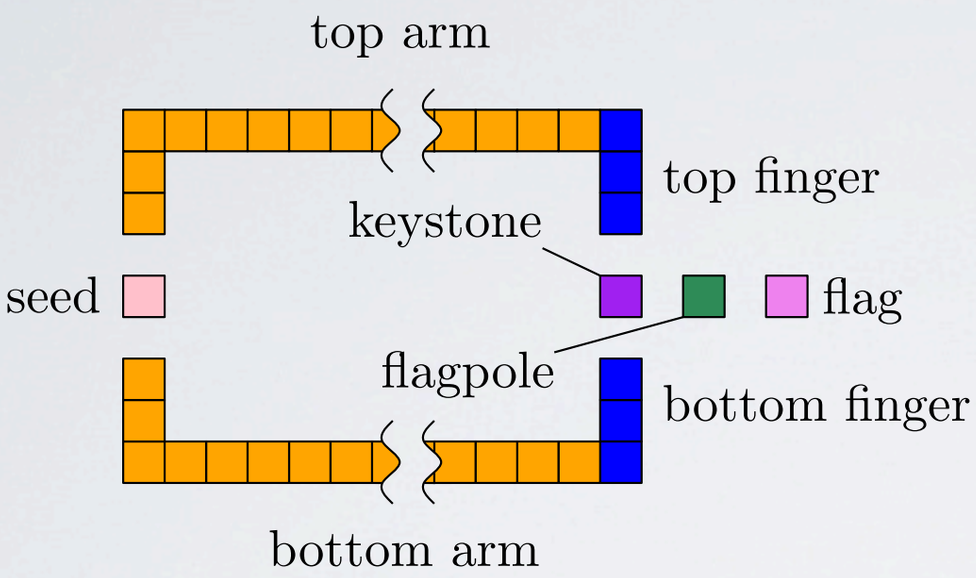

(a)

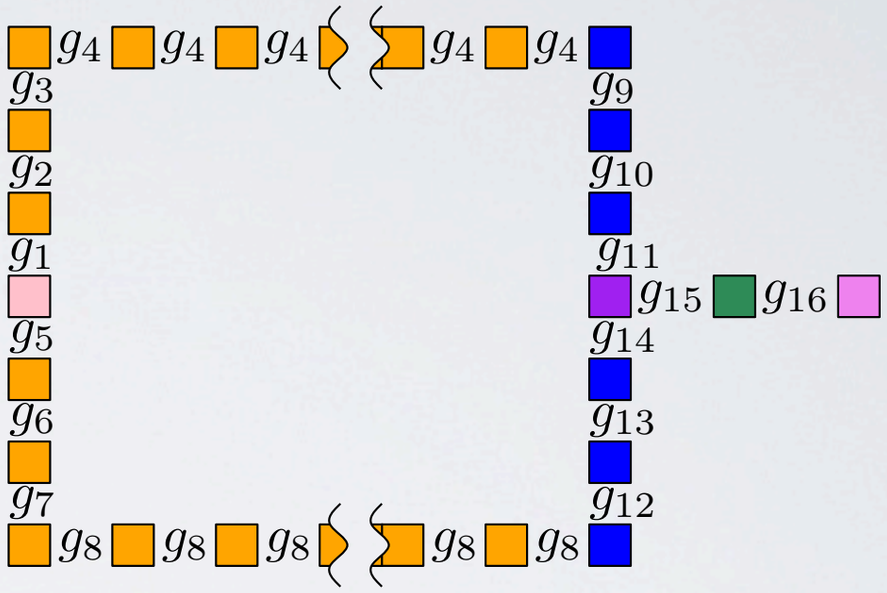

(b)

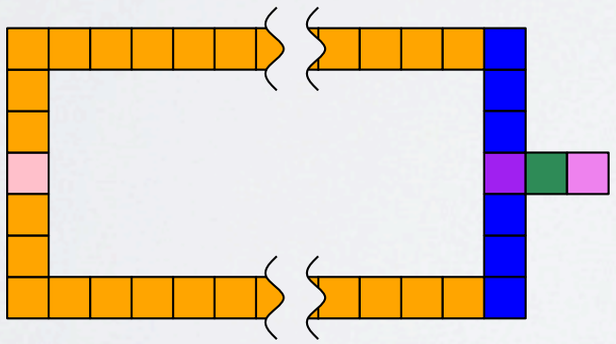

(c)

Equal arm lengths

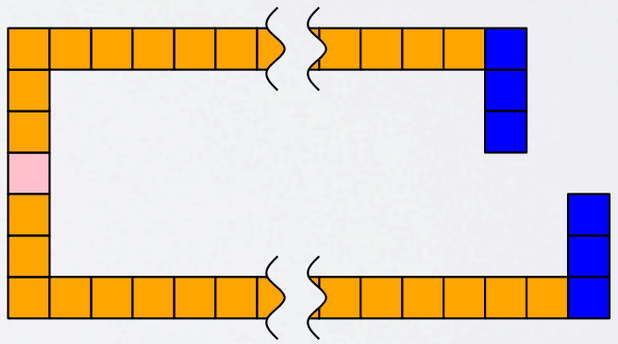

(d)

Unequal arm lengths

Meunier, Patitz, Summers, Theyssier, Winslow, Woods. SODA 2014

Temperature 1 is not IU for the aTAM

- First we prove a kind of strong pumping lemma for tile assembly (that holds at any temperature)

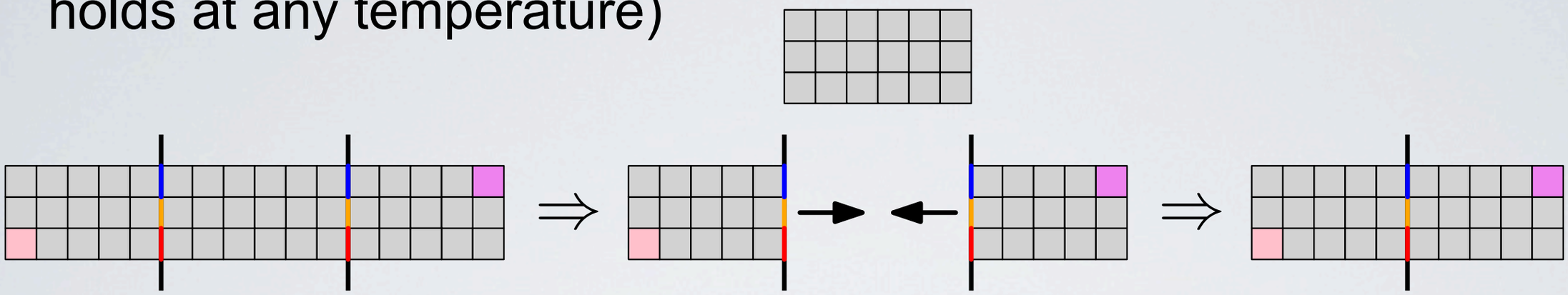

- We then use this pumping lemma to “fool” any claimed temperature 1 simulator into exposing its inability to simulate cooperation

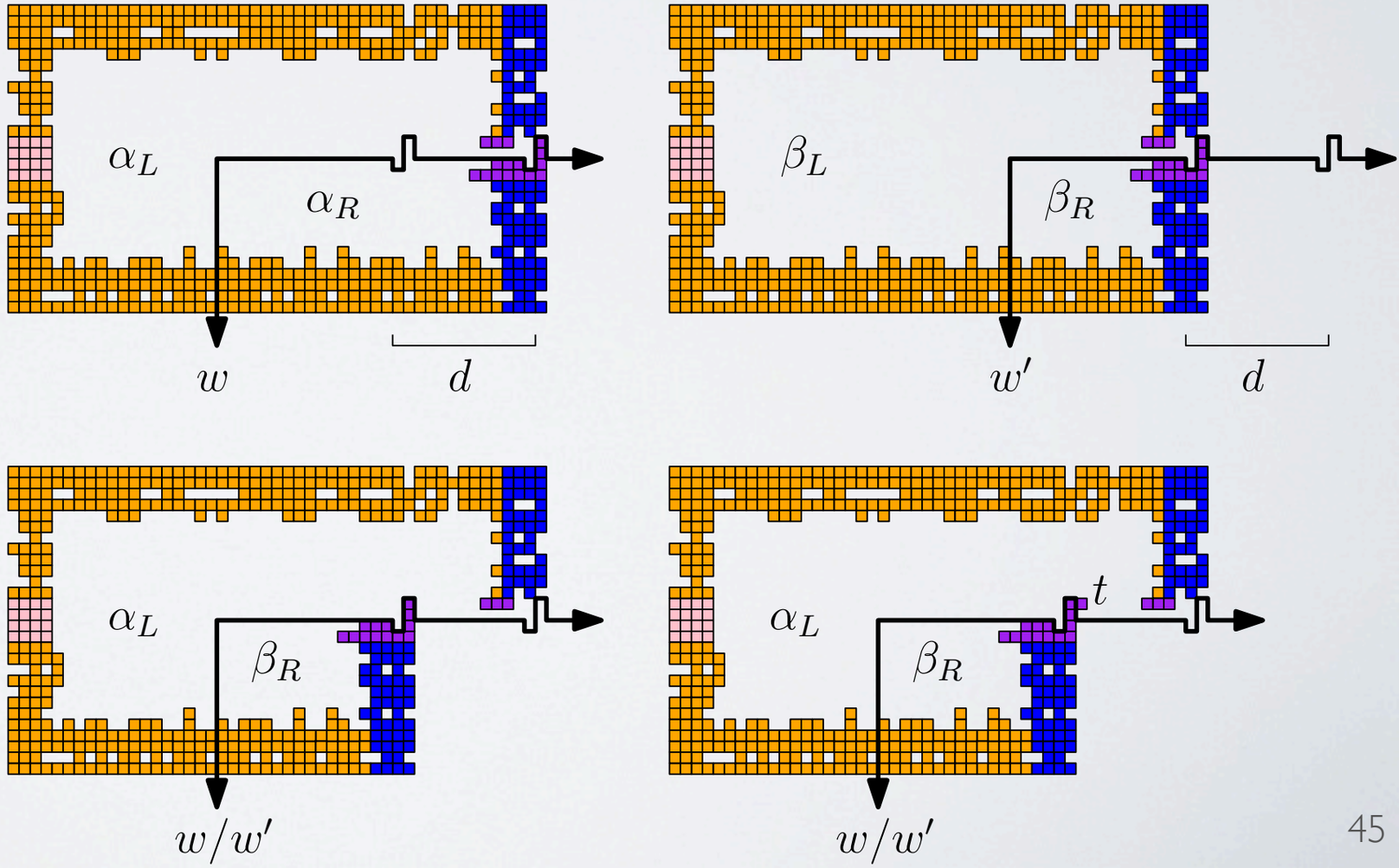

Temperature 1 is not IU for the aTAM

- There are simple temperature 2 systems that can not be simulated by any temperature 1 system Meunier, Patitz, Summers, Theyssier, Winslow, Woods. SODA 2014
- First fully-general negative result on temperature 1
- This negative result holds in 2D and 3D
- Recall: Deterministic 3D temperature 1 systems can simulate Turing machines! Cook, Fu Schweller. SODA 2011
- So these Turing-universal (powerful!) tile assembly systems can not simulate tile assembly
- **Turing universal algorithmic behavior in self-assembly provably does not imply the ability to simulate arbitrary algorithmic self-assembly processes**
- We walked into Mordor, and survived

Our journey

polygon
TAM, $\tau = 2$

$\cup\!\!|$ [8]

hexagon
TAM, $\tau = 2$

[8] $\cup\!\!|$

aTAM, $\tau \geq 2$ (IU [11])

$\subset\!\!\!\!\neq$ [19] $\cup\!\!|$

aTAM, $\tau = 1$ — [19] $\neq$ — Locally consistent aTAM $\tau = 2$ (IU [12])

Our journey

FORODWAITH
ERED MITHRIN
IRON HILLS
The Lost Realm of
ARNOR
ERIADOR
RHUDAUR
RHOVANION
MIRKWOOD
Sea of Rhûn
ENEDWAITH
ROHAN
The BROWN LANDS
ERED LITHUI
MORDOR
NURN
Sea of Nurnen
South Gondor
NEAR HARAD
The Realm of MIDDLE EARTH
Miles
Intrinsically universal tile set
Temperature 1
?

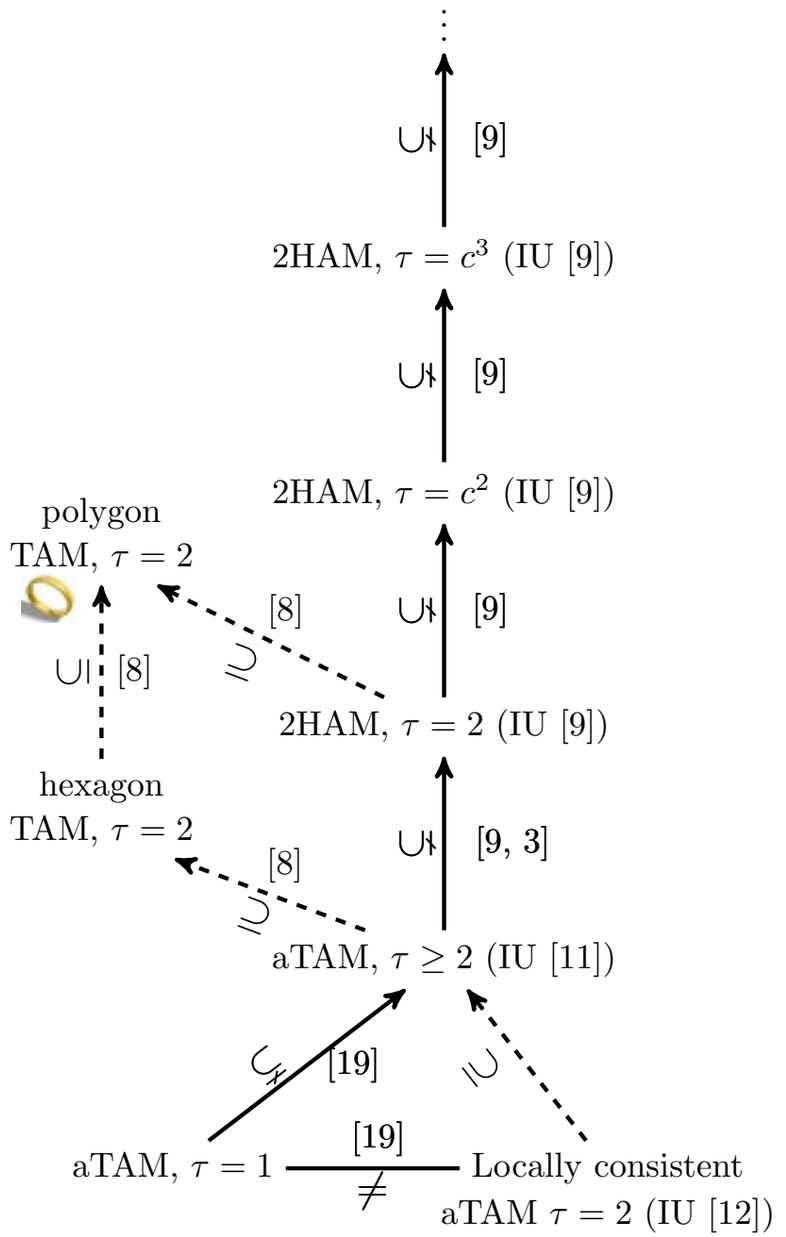

⋮
[9]
2HAM, $\tau = c^3$ (IU [9])
[9]
2HAM, $\tau = c^2$ (IU [9])
polygon
TAM, $\tau = 2$
[8]
[9]
[8]
2HAM, $\tau = 2$ (IU [9])
hexagon
TAM, $\tau = 2$
[8]
[9, 3]
aTAM, $\tau \geq 2$ (IU [11])
[19]
[19]
aTAM, $\tau = 1$
Locally consistent
aTAM $\tau = 2$ (IU [12])

Conclusions

- 1. There is an intrinsically universal tile set:
  - i.e. there is a single tile set that can simulate any tile assembly system
- 2. There is a single rotatable polygon that can simulate any tile assembly system, or Turing machine
- 3. There is an aperiodic rotatable polygonal tile
- 4. Intrinsic universality can be used to separate, and classify, the power of self-assembly systems:
  - Temperature 1 can not simulate temperature 2 and above
  - Infinite set, of infinite hierarchies of hierarchical self-assembly systems (2HAM)
  - Other cool results that I have not mentioned:
    - Simulations between tile assembly and CA

      Hendricks, Patitz, MCU, 2013
    - Two-handed 3D tile set is IU for the 2D Signal-Passing tile assembly model

      Hendricks, Padilla, Patitz and Rogers, DNA, 2013
    - 3D Temperature 1 can simulate 2D Temperature 1

      Meunier, Patitz, Summers, Theyssier, Winslow, Woods. SODA 2014
    - The restricted “locally consistent” tile assembly systems are intrinsic universal

      Doty, Lutz, Patitz, Summers, Woods, STACS 2010

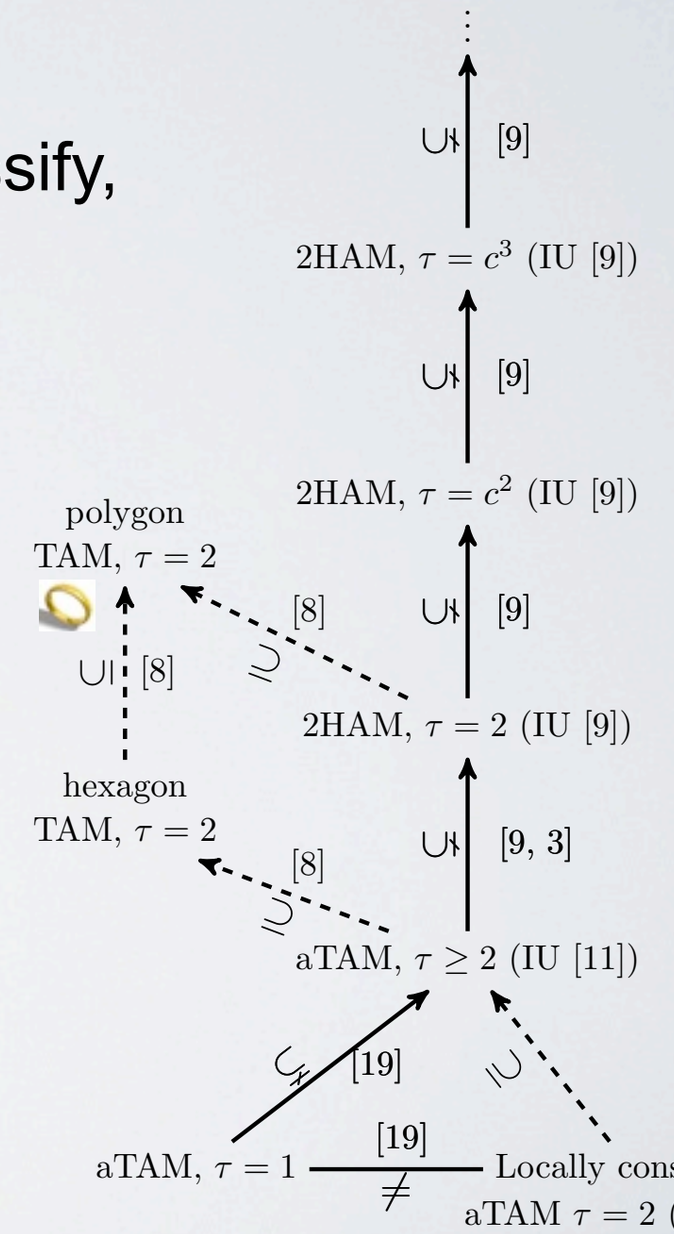

Open questions

- 1. Are the following models intrinsically universal?
  - hexagonal tile assembly model, polygonal tile assembly model, nubots, signal-passing tile assembly model
- 2. Is there a tile set $U_{\text{crazy fool}}$ that does nothing but simulate members from a “large” class of tile assembly systems?
- 3. Can we show that no 2D temperature 1 system can deterministically (correctly) simulate temperature 2 “zig-zag” tile assembly systems?

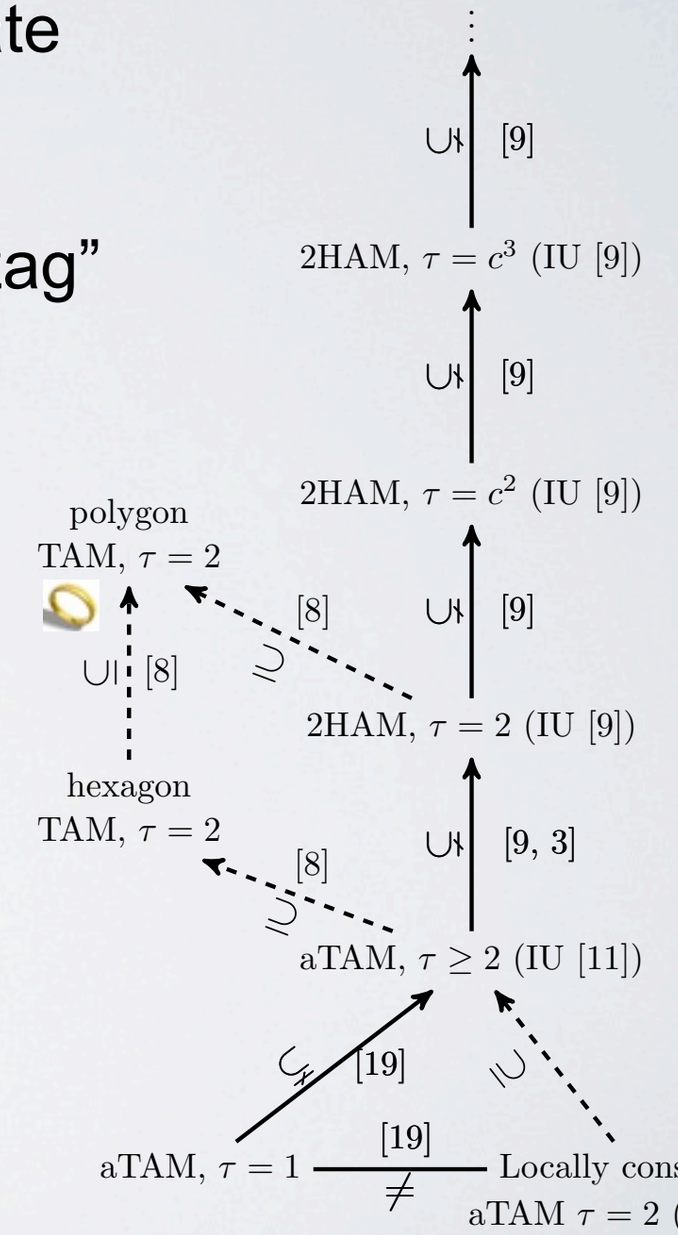

Thanks!

Jack Lutz | Matthew Patitz | Dave Doty | Scott Summers

Robert Schweller

The tile assembly model is intrinsically universal. Doty, Lutz, Patitz, Schweller, Summers, Woods. FOCS 2012

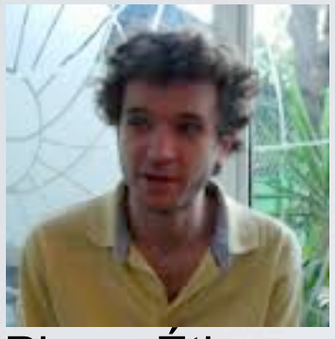

Pierre-Étienne Meunier

Guillaume Theyssier

Andrew Winslow

Intrinsic universality in tile self-assembly requires cooperation. Meunier, Patitz, Summers, Theyssier, Winslow, Woods. SODA 2014

Erik Demaine

Martin Demaine

Sándor Fekete

One Tile to Rule Them All: Simulating Any Turing Machine, Tile Assembly System, or Tiling System with One Rotatable Puzzle Piece. Demaine, Demaine, Fekete, Patitz, Schweller, Winslow, Woods. 2012.

- Who paid? NSF: Molecular programming project grant 0832824, CCF-1219274 and CCF-1162589; Science Foundation Ireland, Junta de Andalucia Spain, Canada.
- Special thanks: Erik Winfree, Paul Rothemund, Matthew Cook, Turlough Neary, Niall Murphy, David Soloveichik, Shuki Bruck. Also the members of Erik Winfree's, Paul Rothemund's and Shuki Bruck's groups at Caltech

fin?
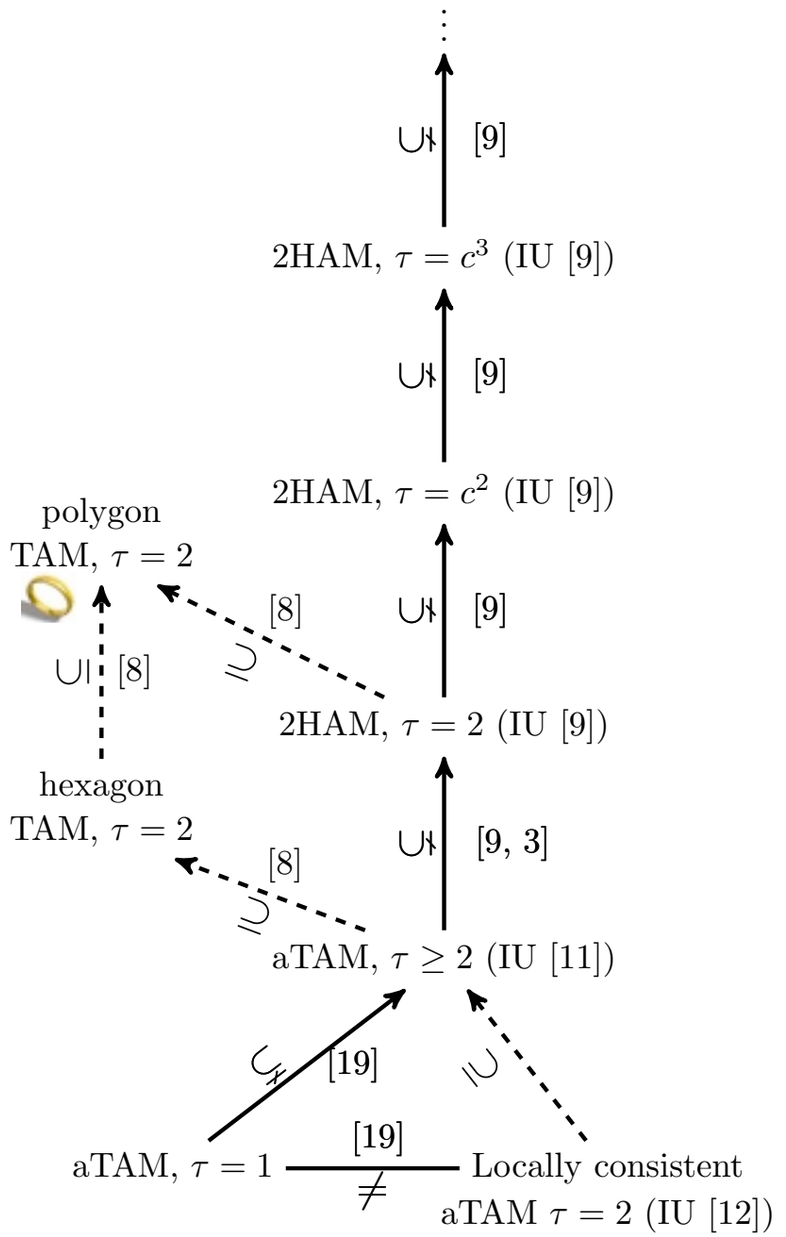
Our journey must continue...